Yates County Planning Board Referral Form

Referral # 2016-18
County Use Only

Date Received 04/07/2016

Revised 1/2014

Municipality and Referring Agency Penn Yan Planning Board

Project Address Lot#8 Horizon Park Drive, Penn Yan Project Tax Map # ~~To be assigned by Yates County~~ #61.36-1-3.11

Zoning District Planned Business

Applicant (**Name & MAILING**) Kenneth Buschner 594 E. Lake Road, Penn Yan 14527

Email

Property Owner (**Name & MAILING**) same

Email

Reason for Referral (Prox. to Cty Rd., State Rd., Muni Boundary, etc.) 500' from town boundary

Application Type

- Area Variance ☐
- Use Variance ☐
- Special Use Permit ☐
- Site Plan ☒
- Subdivision ☐
- Text Amendment ☐
- Map Amendment ☐
- Other ☐ _____

Project Description

Construction of 40' X 60' wood building with gravel drive

Supporting Documents Required (IF N/A, include explanation)

- Municipal Application ☒
- Tax Map or Plat ☒
- SEQR ☒
- Site Plan * ☒
- Variance Criteria ** ☐
- Subdivision Plat ☐ For Subdivision Referrals Only
- Other ☐ _____

*If Site Plan Review, Site Plan **MUST** be detailed and meet the municipal requirements.

All Variance referrals (Area/Use) **MUST include detailed justifications associated with reason/s for appeal.

Certification: *With the following signature I certify that this application provides a complete description of the proposed local action and is a complete application pursuant to NYS General Municipal Law Article 12b, Section 239-m, part c.*

Lynn Dwyer, Sec'y, Referring Official

Provision of required information is the responsibility of the referring agency. Failure to provide such information may result in a significant delay in processing.

Submit To: **Yates County Planning Department, Sbonshak@yatescounty.org or 417 Liberty St. Suite 1093, Penn Yan, NY 14527**

Illegi rejected. PRINT OR TYPE ONLY

RECEIVED MAR 22 2016

Application for Site Plan Review

Applicant: KENNETH BUSCHNER Date: 3/21/16

Mailing Address: 594 E. LAKE RD. PENN YAN, NY 14527

Business phone: 585-747-8880 Cell phone: _____ Business fax: _____

Consent has been granted by the owner for this application X yes ____ no

Proof of consent must be supplied.

Property Owner's name: KENNETH BUSCHNER

Property Owner's Address: 594 E. LAKE RD. PENN YAN, NY 14527

PROJECT ADDRESS: LOT 8, HORIZON BUSINESS PARK

Tax Map # To Be Assigned by Yates County

Type of proposed building: WOOD
(Masonry – Wood - Metal)

Use of Building: COMMERCIAL Parking requirements: 5
(See code office/bldg. dept)

Zoning district: PB Water district: PY Fire district: PY

Total **square footage** of: Building: 2400 SF Open storage area: _____

Landscaped area: 238 SF Parking: 2350 SF

Other: _____
(Give reason for ***other*** as it relates to proposed use):

TOTAL SITE (ft²): 70,262 SF

Easements X Yes ___ No If Yes, Ex 20' UTILITY, Ex 25' DRAINAGE
(Brief description)

Deed Restrictions: ___ Yes ___ No If Yes, _____
(Brief description)

Do you plan to dedicate infrastructure facilities to the village? ____ Yes X No

If yes, refer to *Penn Yan Design & Construction Standards for Land Development*, **section 1.7 "*Requirements for Approval for Dedication*".**

Date: 3/21/16

PRINT Kenneth Buschner
APPLICANT NAME

SIGN Kenneth Buschner
APPLICANT NAME

Short Environmental Assessment Form
Part 1 - Project Information

Instructions for Completing

Part 1 - Project Information. The applicant or project sponsor is responsible for the completion of Part 1. Responses become part of the application for approval or funding, are subject to public review, and may be subject to further verification. Complete Part 1 based on information currently available. If additional research or investigation would be needed to fully respond to any item, please answer as thoroughly as possible based on current information.

Complete all items in Part 1. You may also provide any additional information which you believe will be needed by or useful to the lead agency; attach additional pages as necessary to supplement any item.

Part 1 - Project and Sponsor Information

Name of Action or Project:
New commercial building construction

Project Location (describe, and attach a location map):
New Horizon Business Park, Lot 8

Brief Description of Proposed Action:
Construction of a 40'x60' pole-barn style building for commercial use with gravel 2350 sf parking area and gravel driveway.

Name of Applicant or Sponsor:	Telephone: 585-924-7430
Meagher Engineering	E-Mail: info@meagherengineering.com

Address:
P.O. Box 76

City/PO:	State:	Zip Code:
Victor	NY	14564

	NO	YES
1. Does the proposed action only involve the legislative adoption of a plan, local law, ordinance, administrative rule, or regulation? If Yes, attach a narrative description of the intent of the proposed action and the environmental resources that may be affected in the municipality and proceed to Part 2. If no, continue to question 2.	☑	☐
2. Does the proposed action require a permit, approval or funding from any other governmental Agency? If Yes, list agency(s) name and permit or approval:	☑	☐

3.a. Total acreage of the site of the proposed action? 1.613 acres
b. Total acreage to be physically disturbed? 0.50 acres
c. Total acreage (project site and any contiguous properties) owned or controlled by the applicant or project sponsor? 1.613 acres

4. Check all land uses that occur on, adjoining and near the proposed action.
☐ Urban ☐ Rural (non-agriculture) ☑ Industrial ☑ Commercial ☐ Residential (suburban)
☑ Forest ☐ Agriculture ☐ Aquatic ☐ Other (specify): _____
☐ Parkland

	NO	YES	N/A
5. Is the proposed action,			
a. A permitted use under the zoning regulations?	☐	☑	☐
b. Consistent with the adopted comprehensive plan?	☐	☑	☐
6. Is the proposed action consistent with the predominant character of the existing built or natural landscape?	NO ☐	YES ☑	
7. Is the site of the proposed action located in, or does it adjoin, a state listed Critical Environmental Area? If Yes, identify: _____	NO ☑	YES ☐	
8. a. Will the proposed action result in a substantial increase in traffic above present levels?	NO ☑	YES ☐	
b. Are public transportation service(s) available at or near the site of the proposed action?	☑	☐	
c. Are any pedestrian accommodations or bicycle routes available on or near site of the proposed action?	☑	☐	
9. Does the proposed action meet or exceed the state energy code requirements? If the proposed action will exceed requirements, describe design features and technologies: _____	NO ☐	YES ☑	
10. Will the proposed action connect to an existing public/private water supply? If No, describe method for providing potable water: _____	NO ☐	YES ☑	
11. Will the proposed action connect to existing wastewater utilities? If No, describe method for providing wastewater treatment: _____	NO ☐	YES ☑	
12. a. Does the site contain a structure that is listed on either the State or National Register of Historic Places?	NO ☑	YES ☐	
b. Is the proposed action located in an archeological sensitive area?	☐	☑	See attached for note
13. a. Does any portion of the site of the proposed action, or lands adjoining the proposed action, contain wetlands or other waterbodies regulated by a federal, state or local agency?	NO ☐	YES ☑	
b. Would the proposed action physically alter, or encroach into, any existing wetland or waterbody? If Yes, identify the wetland or waterbody and extent of alterations in square feet or acres: _____	☑	☐	
14. Identify the typical habitat types that occur on, or are likely to be found on the project site. Check all that apply: ☐ Shoreline ☑ Forest ☐ Agricultural/grasslands ☐ Early mid-successional ☐ Wetland ☐ Urban ☑ Suburban			
15. Does the site of the proposed action contain any species of animal, or associated habitats, listed by the State or Federal government as threatened or endangered?	NO ☑	YES ☐	
16. Is the project site located in the 100 year flood plain?	NO ☑	YES ☐	
17. Will the proposed action create storm water discharge, either from point or non-point sources? If Yes, a. Will storm water discharges flow to adjacent properties? ☐ NO ☑ YES	NO ☐	YES ☑	
b. Will storm water discharges be directed to established conveyance systems (runoff and storm drains)? If Yes, briefly describe: ☐ NO ☑ YES			
Water will runoff to existing drainage swales to the north, south, and west of the site. Swales are located in existing drainage easements. Runoff will traverse a minimum of 75' across grass lawn before entering swales.			

	NO	YES
18. Does the proposed action include construction or other activities that result in the impoundment of water or other liquids (e.g. retention pond, waste lagoon, dam)? If Yes, explain purpose and size:	✓	
19. Has the site of the proposed action or an adjoining property been the location of an active or closed solid waste management facility? If Yes, describe:	✓	
20. Has the site of the proposed action or an adjoining property been the subject of remediation (ongoing or completed) for hazardous waste? If Yes, describe:	✓	

I AFFIRM THAT THE INFORMATION PROVIDED ABOVE IS TRUE AND ACCURATE TO THE BEST OF MY KNOWLEDGE

Applicant/sponsor name: Wendy Meagher, P.E. Date: 3/18/16

Signature:

Part 2 - Impact Assessment. The Lead Agency is responsible for the completion of Part 2. Answer all of the following questions in Part 2 using the information contained in Part 1 and other materials submitted by the project sponsor or otherwise available to the reviewer. When answering the questions the reviewer should be guided by the concept "Have my responses been reasonable considering the scale and context of the proposed action?"

	No, or small impact may occur	Moderate to large impact may occur
1. Will the proposed action create a material conflict with an adopted land use plan or zoning regulations?	No	
2. Will the proposed action result in a change in the use or intensity of use of land?	No	
3. Will the proposed action impair the character or quality of the existing community?	No	
4. Will the proposed action have an impact on the environmental characteristics that caused the establishment of a Critical Environmental Area (CEA)?	No	
5. Will the proposed action result in an adverse change in the existing level of traffic or affect existing infrastructure for mass transit, biking or walkway?	No	
6. Will the proposed action cause an increase in the use of energy and it fails to incorporate reasonably available energy conservation or renewable energy opportunities?	No	
7. Will the proposed action impact existing: a. public / private water supplies?	No	
b. public / private wastewater treatment utilities?	No	
8. Will the proposed action impair the character or quality of important historic, archaeological, architectural or aesthetic resources?	No	
9. Will the proposed action result in an adverse change to natural resources (e.g., wetlands, waterbodies, groundwater, air quality, flora and fauna)?	No	

	No, or small impact may occur	Moderate to large impact may occur
10. Will the proposed action result in an increase in the potential for erosion, flooding or drainage problems?	No	
11. Will the proposed action create a hazard to environmental resources or human health?	No	

Part 3 - Determination of significance. The Lead Agency is responsible for the completion of Part 3. For every question in Part 2 that was answered "moderate to large impact may occur", or if there is a need to explain why a particular element of the proposed action may or will not result in a significant adverse environmental impact, please complete Part 3. Part 3 should, in sufficient detail, identify the impact, including any measures or design elements that have been included by the project sponsor to avoid or reduce impacts. Part 3 should also explain how the lead agency determined that the impact may or will not be significant. Each potential impact should be assessed considering its setting, probability of occurring, duration, irreversibility, geographic scope and magnitude. Also consider the potential for short-term, long-term and cumulative impacts.

☐ Check this box if you have determined, based on the information and analysis above, and any supporting documentation, that the proposed action may result in one or more potentially large or significant adverse impacts and an environmental impact statement is required.

☒ Check this box if you have determined, based on the information and analysis above, and any supporting documentation, that the proposed action will not result in any significant adverse environmental impacts.

Village of Penn Yan Planning Board
Name of Lead Agency

April 4, 2016
Date

Clifford Orr
Print or Type Name of Responsible Officer in Lead Agency

Chairman of the Board
Title of Responsible Officer

Signature of Responsible Officer in Lead Agency

Signature of Preparer (if different from Responsible Officer)

EAF Mapper Summary Report

Thursday, February 18, 2016 2:17 PM

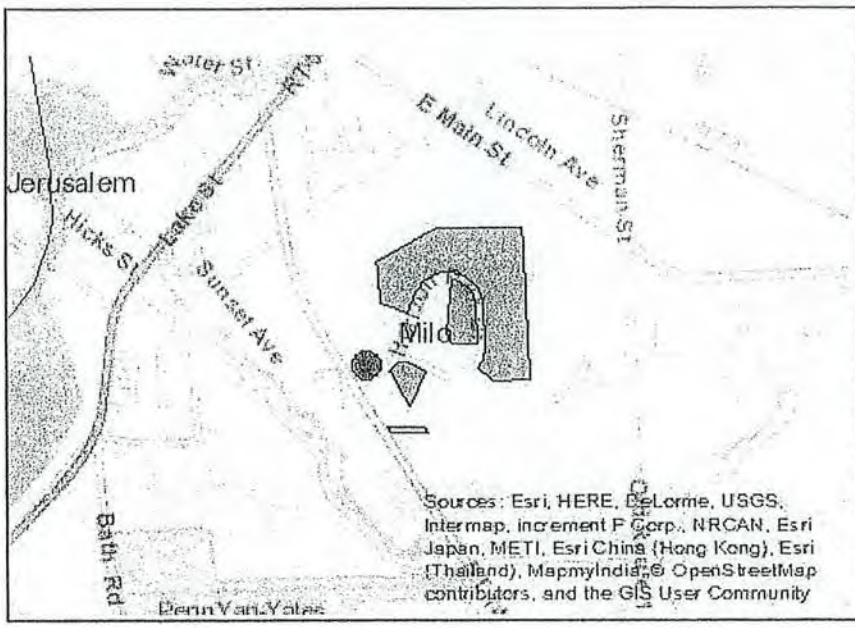

Disclaimer: The EAF Mapper is a screening tool intended to assist project sponsors and reviewing agencies in preparing an environmental assessment form (EAF). Not all questions asked in the EAF are answered by the EAF Mapper. Additional information on any EAF question can be obtained by consulting the EAF Workbooks. Although the EAF Mapper provides the most up-to-date digital data available to DEC, you may also need to contact local or other data sources in order to obtain data not provided by the Mapper. Digital data is not a substitute for agency determinations.

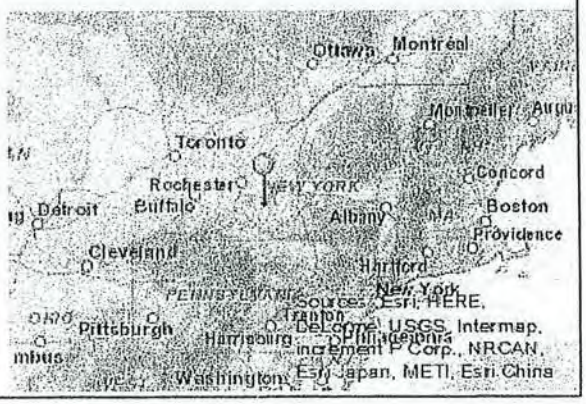

Part 1 / Question 7 [Critical Environmental Area]	No
Part 1 / Question 12a [National Register of Historic Places]	No
Part 1 / Question 12b [Archeological Sites]	Yes* *-Not at site but within 500' of site
Part 1 / Question 13a [Wetlands or Other Regulated Waterbodies]	Yes - Digital mapping information on local and federal wetlands and waterbodies is known to be incomplete. Refer to EAF Workbook.
Part 1 / Question 15 [Threatened or Endangered Animal]	No
Part 1 / Question 16 [100 Year Flood Plain]	Digital mapping data are not available or are incomplete. Refer to EAF Workbook.
Part 1 / Question 20 [Remediation Site]	No

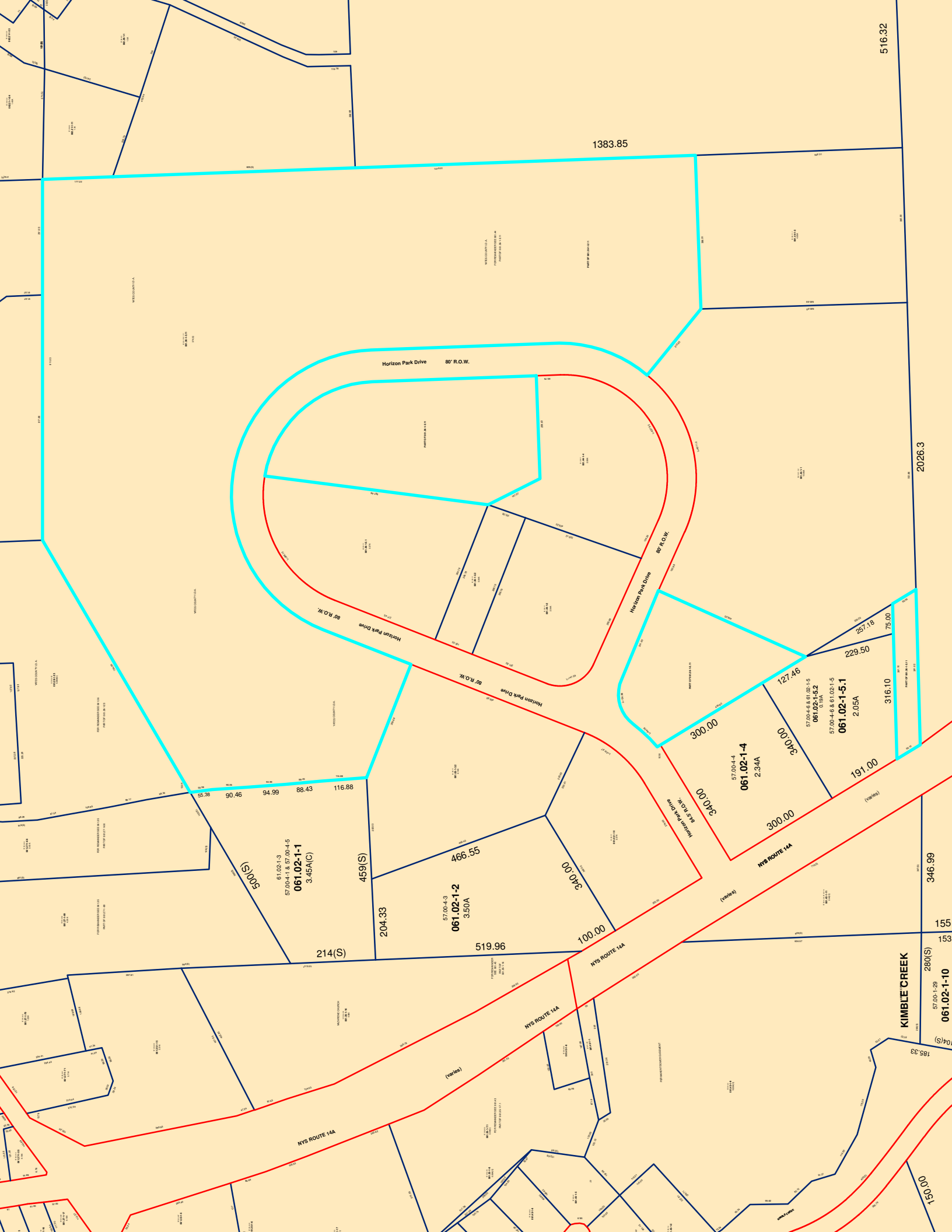
516.32
1383.85
2026.3
Horizon Park Drive 80' R.O.W.
Horizon Park Drive 80' R.O.W.
Horizon Park Drive 80' R.O.W.
Horizon Park Drive 80' R.O.W.
Horizon Park Drive 80' R.O.W.
257.18
75.00
229.50
127.46
316.10
300.00
340.00
57.00-4-4
061.02-1-4
2.34A
57.00-4-6 & 61.02-1-5
061.02-1-5.2
0.19A
57.00-4-6 & 61.02-1-5
061.02-1-5.1
2.05A
191.00
(varies)
NYS ROUTE 14A
346.99
155
153
280(S)
57.00-1-29
061.02-1-10
KIMBLE CREEK
185.33
150.00
55.38
90.46
94.99
88.43
116.88
500(S)
61.02-1-3
57.00-4-1 & 57.00-4-5
061.02-1-1
3.45A(C)
459(S)
466.55
57.00-4-3
061.02-1-2
3.50A
340.00
204.33
100.00
214(S)
519.96
NYS ROUTE 14A
(varies)
NYS ROUTE 14A
(varies)
NYS ROUTE 14A

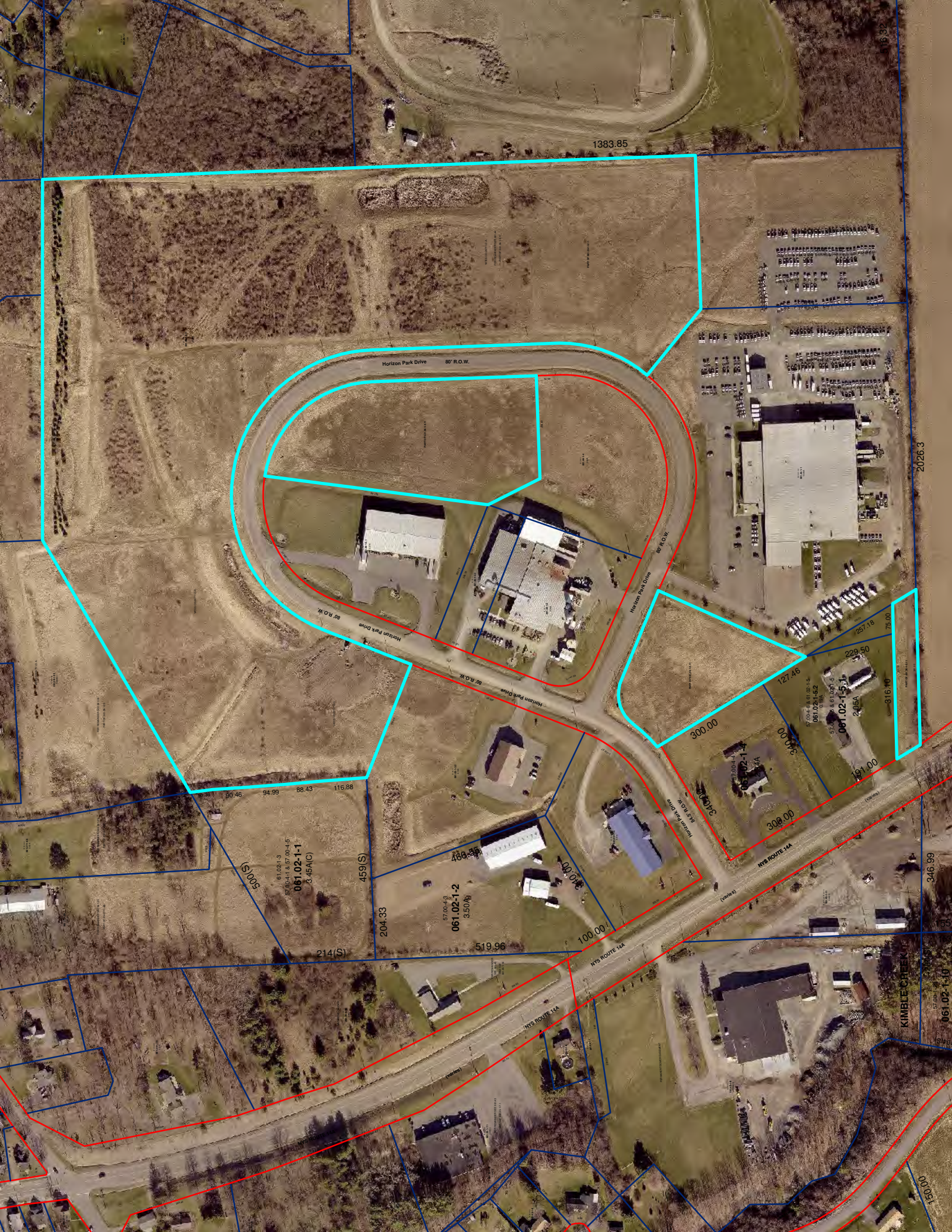
1383.85
1653
2026.3
Horizon Park Drive
80' R.O.W.
Horizon Park Drive
80' R.O.W.
Horizon Park Drive
80' R.O.W.
Horizon Park Drive
80' R.O.W.
Horizon Park Drive
84.5' R.O.W.
257.18
75.00
229.50
127.46
316.10
300.00
340.00
191.00
300.00
340.00
061.02-1-5.1
2.06A
061.02-1-5.2
0.18A
061.02-1-4
NYS ROUTE 14A
(varies)
346.99
50.38
50.46
94.99
88.43
116.88
500(S)
061.02-1-1
3.45A(C)
459(S)
460.35
00.01
061.02-1-2
3.50A
204.33
100.00
214(S)
519.96
NYS ROUTE 14A
(varies)
KIMBLE CREEK
061.02-1-10
1500.00

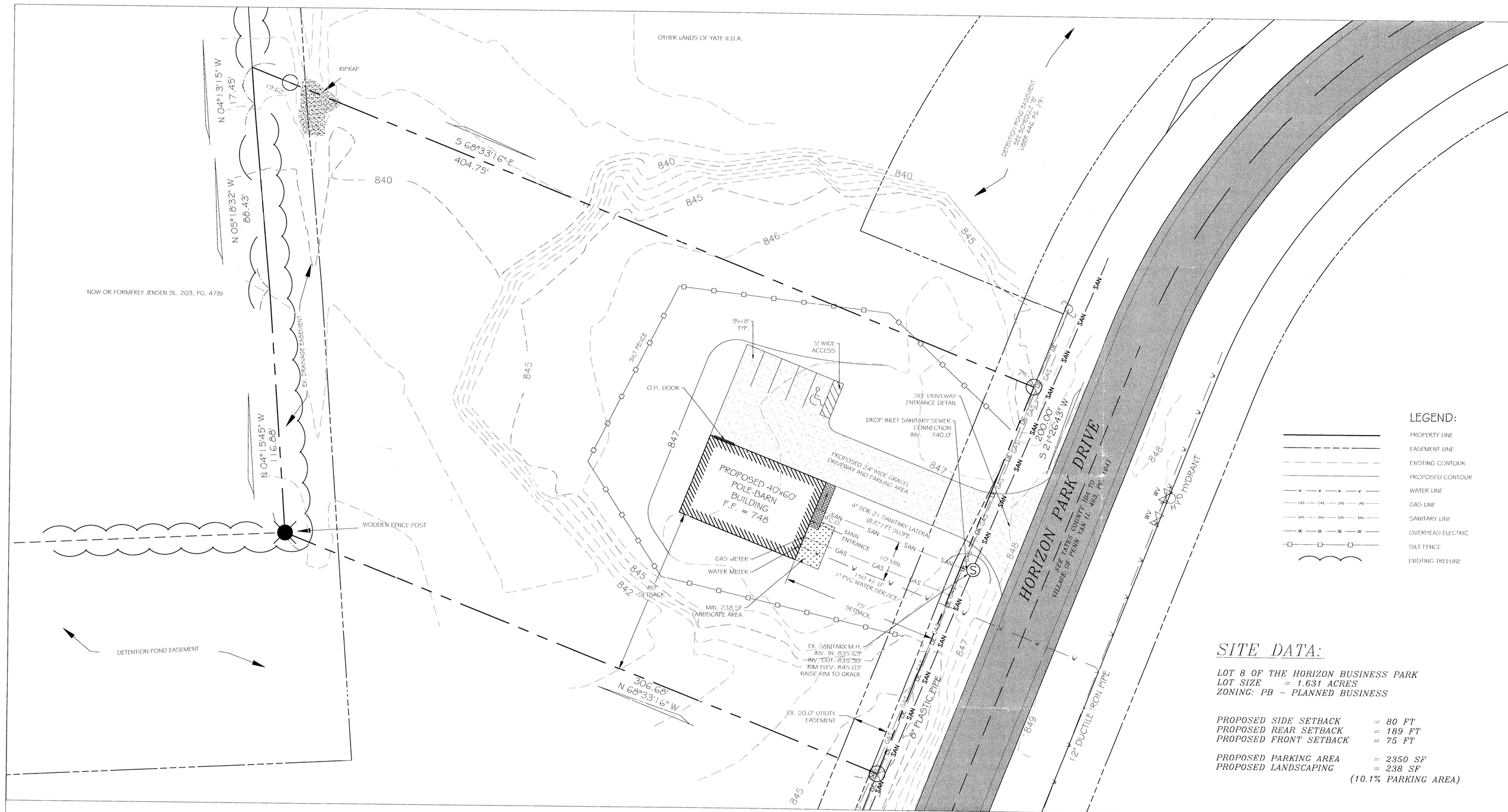

PROPOSED SITE PLAN

SCALE: 1"=30'

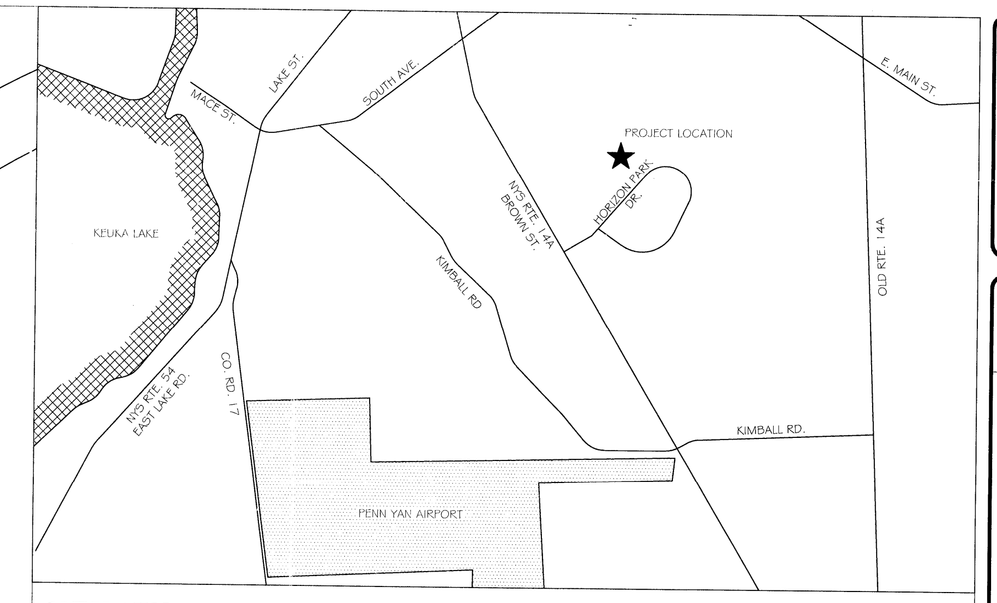

UTILITY, EROSION, & SURVEY NOTES

1. DEVELOPER SHALL PROVIDE FOR EROSION CONTROL BARRIERS WHERE NEEDED DURING CONSTRUCTION TO THE SATISFACTION OF THE NYSDEC, THE VILLAGE OF PANN YAN, AND THEIR ENGINEER. EROSION CONTROL SHALL NOT BE REMOVED UNTIL APPROVAL HAS BEEN GRANTED BY THE VILLAGE OF PENN YAN.

2. PROPOSED USE – COMMERCIAL NON-RETAIL.

3. ROADWAY DRAINAGE ALONG HORIZON PARK DRIVE TO BE MAINTAINED AS NECESSARY.

4. THE ACCURACY OF EXISTING UTILITIES SHOWN HEREON IS NOT GUARANTEED. EXISTING UTILITIES SHOWN ARE PLOTTED FROM FIELD SURVEY DATA AND RECORD MAP INFORMATION. THE CONTRACTOR SHALL TAKE THE NECESSARY MEASURES TO PROTECT EXISTING UTILITIES. LOCATION OR EXISTENCE OF GAS PIPELINE SET OUT IN LIBER 132 OF DEEDS, PAGE 264 IS UNKNOWN. CAUTION SHALL BE EXERCISED IN DIGGING.

5. ALL UTILITIES SHALL BE UNDERGROUND. CONTRACTOR TO PROVIDE AS-BUILT RECORDS TO THE BUILDING INSPECTOR.

6. IT SHALL BE THE RESPONSIBILITY OF THE CONTRACTOR TO PRESERVE AND PROTECT ALL SURVEY MONUMENTATION.

7. FILL AREAS TO BE IMMEDIATELY SEEDED TO PREVENT EROSION.

8. SAFE AND CONTINUOUS TRAFFIC AND INGRESS AND EGRESS FOR ADJACENT OWNER DRIVEWAYS, SERVICE AND PUBLIC ROADS SHALL BE MAINTAINED THROUGHOUT THE PERIOD OF CONSTRUCTION. THE CONTRACTOR SHALL TAKE SPECIAL CARE NOT TO ALLOW SILT RUNOFF ONTO ADJOINING PROPERTIES. THIS MAY INCLUDE THE USE OF INTERCEPTOR SWALES, FILTER SOCKS, STRAW WATTLES AND/OR CRUSHED STONE FILTERS. THE CONTRACTOR WILL ALSO BE RESPONSIBLE FOR CLEANING THE ADJACENT STREETS, GUTTERS AND/OR DOWNSTREAM STORM SEWERS AS NECESSARY OR AS DIRECTED BY THE VILLAGE OF PENN YAN AND THEIR ENGINEER.

9. ALL TOPSOIL STRIPPED SHALL BE STOCKPILED AND REMAIN ONSITE UNTIL PROJECT IS COMPLETED OR UNTIL INSURANCE OF A MINIMUM SEED BED AND 4 INCHES OF TOPSOIL IS PROVIDED. NO FILLING, CONSTRUCTION, OR STORING OF MATERIALS ON SITE WILL BE ALLOWED UNTIL EROSION CONTROL MEASURES (SILTATION FENCE AND STABILIZED CONSTRUCTION ENTRANCE) ARE IN PLACE AS SHOWN, DESCRIBED AND DETAILED ON THIS SHEET.

10. MATERIAL BROUGHT TO THE SITE SHALL BE CLEAN FILL, FREE OF ORGANICS, WASTES, AND FROZEN MATERIAL.

11. EROSION CONTROL DEVICES ARE TO BE ESTABLISHED PRIOR TO COMMENCING EARTHWORK. EROSION CONTROL DEVICES TO BE MAINTAINED BY THE CONTRACTOR PER THE SPECIFICATIONS UNTIL UPSTREAM GROUND COVER HAS BEEN ESTABLISHED AND REMOVAL IS APPROVED BY THE VILLAGE OF PENN YAN AND THEIR ENGINEER.

12. ALL CONSTRUCTION SHALL CONFORM WITH ALL FEDERAL, STATE, AND LOCAL CONSTRUCTION STANDARDS.

13. FLOOR DRAINS, IF CONSTRUCTED, SHALL BE CONNECTED TO THE SANITARY/COMBINATION SEWER. FLOOR DRAINS DO NOT INCLUDE FOUNDATION/FOOTER DRAINS.

14. THE CONTRACTOR WILL BE RESPONSIBLE FOR REPLACING ANY EROSION CONTROL FACILITIES THAT HAVE BECOME CLOGGED, INOPERABLE, OR DAMAGED. STRAW BALES SHALL BE INSPECTED DAILY FOR REPLACEMENT. REPLACEMENT WILL BE AS NECESSARY OR AS DIRECTED BY THE VILLAGE OF PENN YAN AND THEIR ENGINEER.

15. SLOPES SHALL NOT EXCEED 1' VERTICAL TO 3' HORIZONTAL.

16. DATUM – 1988 NAVD – GPS DERIVED. 4. CONTOUR INTERVAL 1'

LEGEND:

- PROPERTY LINE
- EASEMENT LINE
- EXISTING CONTOUR
- PROPOSED CONTOUR
- WATER LINE
- GAS LINE
- SANITARY LINE
- OVERHEAD ELECTRIC
- SILT FENCE
- EXISTING TREELINE

SITE DATA:

LOT 8 OF THE HORIZON BUSINESS PARK
LOT SIZE = 1.631 ACRES
ZONING: PB – PLANNED BUSINESS

PROPOSED SIDE SETBACK	= 80 FT
PROPOSED REAR SETBACK	= 189 FT
PROPOSED FRONT SETBACK	= 75 FT
PROPOSED PARKING AREA	= 2350 SF
PROPOSED LANDSCAPING	= 238 SF (10.1% PARKING AREA)

PRELIMINARY NOT FOR CONSTRUCTION

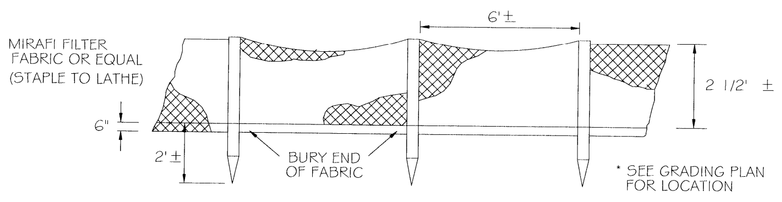

SILT FENCE DETAIL

SCALE: NOT TO SCALE

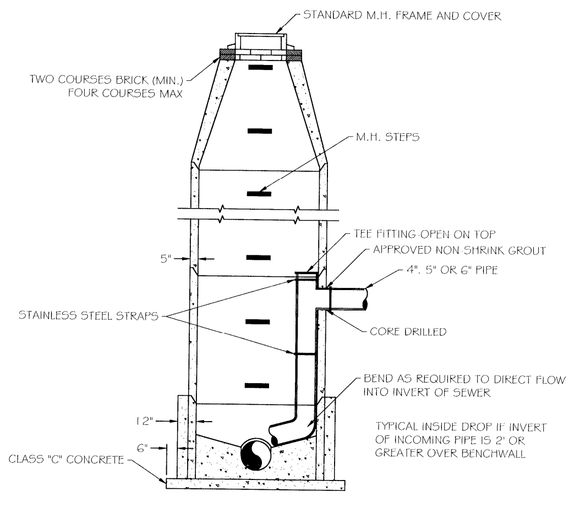

DROP INLET CONNECTION

SCALE: NOT TO SCALE

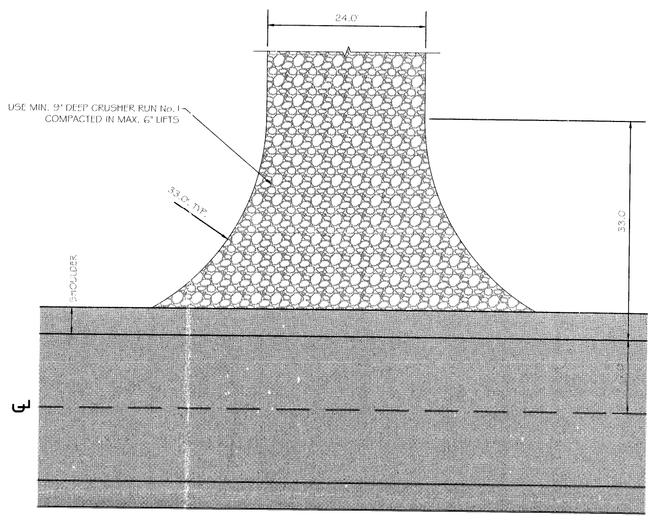

DRIVEWAY ENTRANCE DETAIL

SCALE: NOT TO SCALE

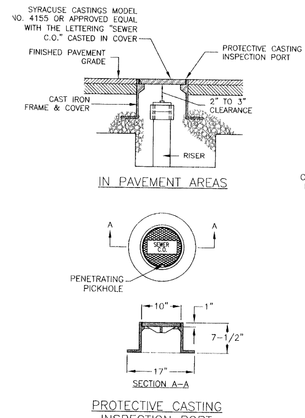

NOTES:

1. MATERIAL SHALL BE GRAY CAST IRON CONFORMING TO A.S.T.M. A48 (LATEST REVISION) CLASS 30B.
2. HEAVY DUTY CASTING SHALL BE DESIGNED FOR A.A.S.H.T.O. H20-16 WHEEL LOADS.

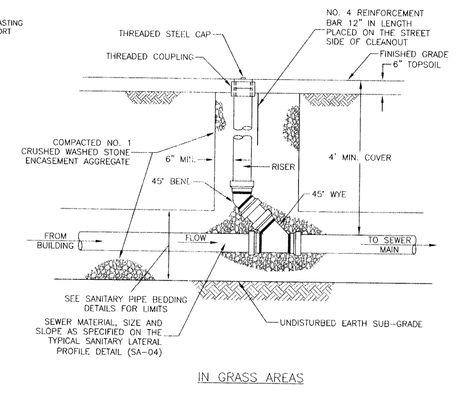

CLEAN OUT DETAIL

SCALE: NOT TO SCALE

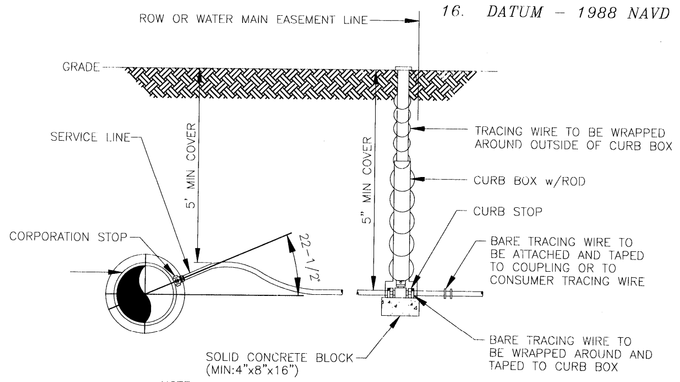

NOTE:

1. COPPER SERVICE TO BE USED UNLESS OTHERWISE APPROVED BY ~~MOTWA~~ Penn Yan Municipal
2. TRACING WIRE TO BE USED WITH POLYETHYLENE SERVICE ONLY.

WATER SERVICE INSTALLATION

SCALE: NOT TO SCALE

PLANNING BOARD CHAIRPERSON	DATE
FIRE MARSHAL	DATE
TOWN ENGINEER	DATE
HIGHWAY SUPERINTENDENT	DATE

COPYRIGHT PROTECTION
UNAUTHORIZED USE, REPRODUCTION AND DISTRIBUTION OF THIS INFORMATION SHOWN HEREON IS STRICTLY PROHIBITED. ANY SUCH UNAUTHORIZED USE SHALL INDEMNIFY AND DEFEND, WITHOUT LIMITATION, MEAGHER ENGINEERING FROM ALL CLAIMS, LOSSES AND EXPENSES ARISING FROM SUCH UNAUTHORIZED USE. MEAGHER ENGINEERING, PLLC. 2013

REVISIONS:		
F		
E		
D		
C		
B		
A		
NO.	DESCRIPTION	DATE

JOB NO. 16804
DRAWN: JWK
DATE: 3/17/2016
CHECKED: WLM
DATE: 3/17/2016
SCALE: AS NOTED

UNAUTHORIZED ALTERATIONS OR ADDITIONS TO THIS DRAWING ARE VIOLATIONS OF THE NYS EDUC. LAW ARTICLE 147, SECTION 7209. NO REVISIONS ARE PERMITTED UNLESS AUTHORIZED BY THE ENGINEER OF RECORD.

STATE OF NEW YORK · WILLIAM L. MEAGHER · No. 071775 · Licensed Professional Engineer

MEAGHER ENGINEERING
CIVIL / STRUCTURAL ENGINEERING
PO Box 378
Victor, NY 14564
PH. 585-924-7430 FAX. 585-924-7457

CLIENT: B25 STUDIOS
130 WATER STREET
BIRKETT LANDING, LOWER LEVEL
PENN YAN, NY 14527

PROJECT: LOT 8 OF THE HORIZON BUSINESS PARK

DRAWING: PROPOSED SITE PLAN

DRAWING NO.
C-1
1 of 1