verizon

C&S COMPANIES

ZONING DRAWINGS

VERIZON WIRELESS
SITE NAME: DRESDEN
PROJECT NUMBER: 20131002739
LOCATION CODE: 283935

NORTH

AERIAL MAP

DIRECTIONS TO SITE: (FROM ROCHESTER) TRAVEL ON I-90 EAST TO EXIT 42 TOWARDS SR14 SOUTH. FOLLOW SR14 TO A LEFT ONTO SWARTHOUT ROAD THEN CONTINUE STRAIGHT ONTO HAZARD ROAD. SITE IS ON THE LEFT.

NORTH

VICINITY MAP

PROJECT INFORMATION

LANDLORD NAME:	NATHAN BURKHOLDER 2382 HAZARD ROAD PENN YAN, NY 14527
SITE NAME:	DRESDEN
SITE ADDRESS:	2382 HAZARD ROAD PENN YAN, NY 14527
TAX MAP #:	063.04-1-7.1
PROPERTY SIZE:	131 ACRES
ZONING DISTRICT:	AG - AGRICULTURAL DISTRICT
LATITUDE:	N 42° 38' 33.00"
LONGITUDE:	W 76° 57' 17.49"
GROUND ELEVATION:	799.60'± AMSL
RAD CENTER:	176'-0" AGL
ZONING JURISDICTION:	TOWN OF TORREY
COUNTY:	YATES
TYPE OF SITE:	PROPOSED SELF SUPPORT TOWER
OVERALL HEIGHT:	184'-0" (180'-0" TOWER WITH 4'-0" LIGHTNING ROD)
AREA OF DISTURBANCE:	0.84 ACRES
ACCESS ROAD LENGTH:	1315'±
DESCRIPTION OF WORK:	THIS PROJECT INCLUDES THE INSTALLATION , OPERATION AND MAINTENANCE OF AN UNMANNED PUBLIC UTILITY/PERSONAL WIRELESS SERVICE FACILITY. MORE SPECIFICALLY THE APPLICANT PROPOSES TO CONSTRUCT SELF SUPPORT TOWER (184'-0" OVERALL HEIGHT, 180'-0" TOWER WITH 4'-0" LIGHTNING ROD) AND 75'-0" x75'-0" FENCED COMPOUND. INSTALL FOUR (4) PROPOSED ANTENNAS PER SECTOR (TOTAL OF 12). INSTALL 11'-6"x16'-0" PROPOSED EQUIPMENT PLATFORM. INSTALLATION 12'-0" WIDE GRAVEL ACCESS DRIVE, APPROXIMATELY 1315'± LENGTH.

PROJECT DIRECTORY

APPLICANT:	UPSTATE CELLULAR NETWORK d/b/a VERIZON WIRELESS 1275 JOHN STREET, SUITE 100 WEST HENRIETTA, NY 14586
CONTACT:	KATHY POMPONIO
PHONE:	(585) 321-5435
EMAIL:	kathy.pomponio@verizonwireless.com
CIVIL ENGINEERING FIRM:	C&S ENGINEERS INC. 499 COL. EILEEN COLLINS BLVD. SYRACUSE, NY 13212
CONTACT:	ERIC N. KENNA P.E.
PHONE:	(315) 455-2000
POWER COMPANY:	NEW YORK STATE ELECTRIC & GAS (NYSEG)
PHONE:	(800) 572 -1311
TELEPHONE COMPANY:	VERIZON COMMUNICATIONS (800) 837-4966

GENERAL NOTES

THE FACILITY IS UNMANNED AND NOT FOR HUMAN HABITATION. A TECHNICIAN WILL VISIT THE SITE AS REQUIRED FOR ROUTINE MAINTENANCE. THE PROJECT WILL NOT RESULT IN ANY SIGNIFICANT DISTURBANCE OR EFFECT ON DRAINAGE; NO SANITARY SEWER SERVICE, POTABLE WATER, OR TRASH DISPOSAL IS REQUIRED AND NO COMMERCIAL SIGNAGE IS PROPOSED.

Dig Safely. New York
www.digsafelynewyork.org

811

- ☐ Call Before You Dig
- ☐ Wait The Required Time
- ☐ Confirm Utility Response
- ☐ Respect the Marks
- ☐ Dig With Care

2382 HAZARD ROAD
PENN YAN, NY 14527

C&S PROJECT: F42.001.008

DECEMBER 2015

DRAWING LIST

SHEET NO.	SHEET NAME	REV	DATE
GENERAL			
G-001	TITLE SHEET	1	2-2-16
CIVIL			
C-100	ADJACENT PROPERTY OWNER PLAN AND INFORMATION	1	2-2-16
C-101	OVERALL SITE PLAN	1	2-2-16
C-102	GRADING PLAN	1	2-2-16
C-103	COMPOUND PLAN	1	2-2-16
C-201	TOWER ELEVATION	1	2-2-16
C-501	DETAILS	1	2-2-16
C-502	EQUIPMENT PLATFORM LAYOUT AND DETAILS	1	2-2-16
C-503	DETAILS	1	2-2-16
C-504	SIGNAGE DETAILS	1	2-2-16

APPROVALS

VERIZON PROJECT MANAGER

DATE

STATE OF NEW YORK
ERIC N. KENNA
EXCELSIOR
088339
LICENSED PROFESSIONAL ENGINEER

TO THE BEST OF OUR KNOWLEDGE, INFORMATION AND BELIEF THE PLANS AND SPECIFICATIONS FOR THIS PROJECT ARE IN COMPLIANCE WITH THE NEW YORK STATE ENERGY CONSERVATION CONSTRUCTION CODE AND THE BUILDING CODE OF NEW YORK STATE

NO ALTERATION PERMITTED HEREON EXCEPT AS PROVIDED UNDER SECTION 7209 SUBDIVISION 2 OF THE NEW YORK STATE EDUCATION LAW

G-001

Feb 02, 2016 - 9:59am
F:\Project\F42 - VERIZON\F42.001.008 UNY NSB Macro 2015\Design\Cadd\Dresden\Zoning\Sheet Files\General\F42001008_G-001.dwg

Copyright ©

Drawing ID	Tax Parcel ID	Owner	Address
A	063.04-1-7.1	Nathan & Mary Burkholder	2382 Hazard Road Penn Yan, NY 14527
B	063.02-1-6.1	Samuel & Lois Zimmerman	2407 Hazard Road Penn Yan, NY 14527
C	064.01-1-15	Arthur & Arlene Zimmerman	2375 Hazard Road Penn Yan, NY 14527
D	075.02-1-3	Richard Henderson	930 West Leach Road Penn Yan, NY 14527
E	063.04-1-6	John & Martha Nolt	2500 Hazard Road Penn Yan, NY 14527
F	063.04-1-8	Rufus & Katie Burkholder	2420 Harzard Road Penn Yan, NY 14527
G	063.04-1-2.112	Samuel & Lois Zimmerman	2407 Hazard Road Penn Yan, NY 14527
H	063.02-1-7	Margaret Henderson	930 West Leach Road Penn Yan, NY 14527
I	063.02-1-4	Laurie Moorehouse	2336 Hazard Road Penn Yan, NY 14527
J	063.02-1-5.13	Harvey & Minerva Leid	2695 SR 14 Penn Yan, NY 14227

C&S COMPANIES
C&S Engineers, Inc.
499 Col. Eileen Collins Blvd.
Syracuse, New York 13212
Phone: 315-455-2000
Fax: 315-455-9667
www.cscos.com

STATE OF NEW YORK
ERIC K. KENNA
088339
LICENSED PROFESSIONAL ENGINEER

verizon

VERIZON WIRELESS
SITE NAME: DRESDEN
PROJECT NO.: 20131002739
LOCATION CODE: 283935
2382 HAZARD ROAD
PENN YAN, NY 14527

MARK	DATE	DESCRIPTION
1	2-2-16	ISSUED FOR PERMITTING

REVISIONS

PROJECT NO:	F42.001.008
DATE:	DECEMBER 2015
DRAWN BY:	M. BUCKINGHAM
DESIGNED BY:	-
CHECKED BY:	E.N. KENNA, P.E.

NO ALTERATION PERMITTED HEREON EXCEPT AS PROVIDED UNDER SECTION 7209 SUBDIVISION 2 OF THE NEW YORK EDUCATION LAW

ADJACENT PROPERTY OWNER PLAN AND INFORMATION

C-100

Copyright ©

Feb 02, 2016 – 9:59am
F:\Project\F42 – VERIZON\F42.001.008 UNY NSB Macro 2015\Design\Cadd\Dresden\Zoning\Sheet Files\Civil\F42001008_C-100.dwg

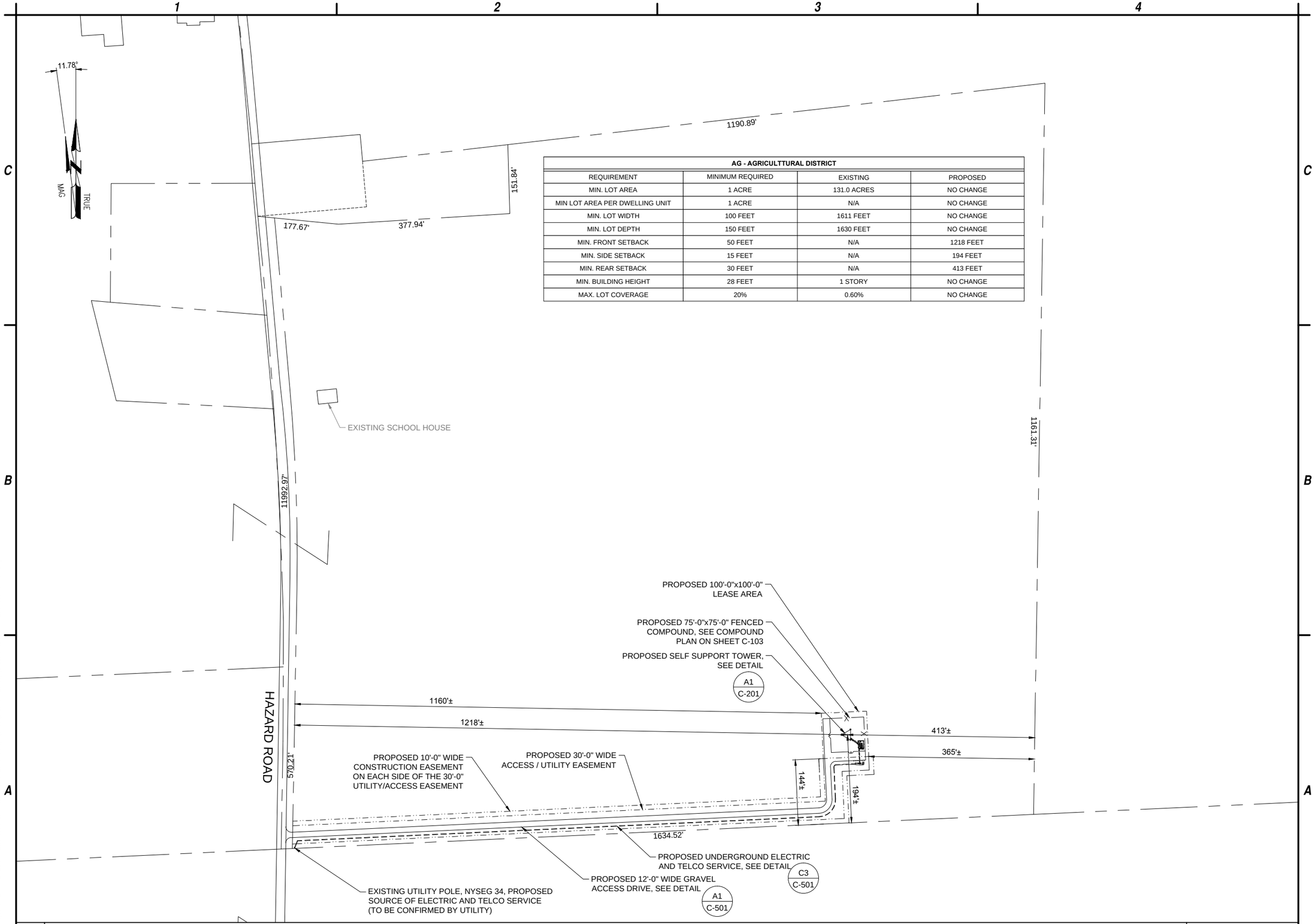

AG - AGRICULTTURAL DISTRICT			
REQUIREMENT	MINIMUM REQUIRED	EXISTING	PROPOSED
MIN. LOT AREA	1 ACRE	131.0 ACRES	NO CHANGE
MIN LOT AREA PER DWELLING UNIT	1 ACRE	N/A	NO CHANGE
MIN. LOT WIDTH	100 FEET	1611 FEET	NO CHANGE
MIN. LOT DEPTH	150 FEET	1630 FEET	NO CHANGE
MIN. FRONT SETBACK	50 FEET	N/A	1218 FEET
MIN. SIDE SETBACK	15 FEET	N/A	194 FEET
MIN. REAR SETBACK	30 FEET	N/A	413 FEET
MIN. BUILDING HEIGHT	28 FEET	1 STORY	NO CHANGE
MAX. LOT COVERAGE	20%	0.60%	NO CHANGE

A1 OVERALL SITE PLAN

SCALE: 1" = 200'-0" (11x17) SCALE: 1" = 100'-0" (22x34)

C&S COMPANIES

C&S Engineers, Inc.
499 Col. Eileen Collins Blvd.
Syracuse, New York 13212
Phone: 315-455-2000
Fax: 315-455-9667
www.cscos.com

STATE OF NEW YORK · ERIC KENNA · 058339 · LICENSED PROFESSIONAL ENGINEER

verizon

VERIZON WIRELESS
SITE NAME: DRESDEN
PROJECT NO.: 20131002739
LOCATION CODE: 283935
2382 HAZARD ROAD
PENN YAN, NY 14527

MARK	DATE	DESCRIPTION
1	2-2-16	ISSUED FOR PERMITTING

REVISIONS

PROJECT NO: F42.001.008
DATE: DECEMBER 2015
DRAWN BY: M. BUCKINGHAM
DESIGNED BY: -
CHECKED BY: E.N. KENNA, P.E.

NO ALTERATION PERMITTED HEREON EXCEPT AS PROVIDED UNDER SECTION 7209 SUBDIVISION 2 OF THE NEW YORK EDUCATION LAW

OVERALL SITE PLAN

C-101

Copyright ©

Feb 02, 2016 – 9:59am
F:\Project\F42 – VERIZON\F42.001.008 UNY NSB Macro 2015\Design\Cadd\Dresden\Zoning\Sheet Files\Civil\F42001008_C-101.dwg

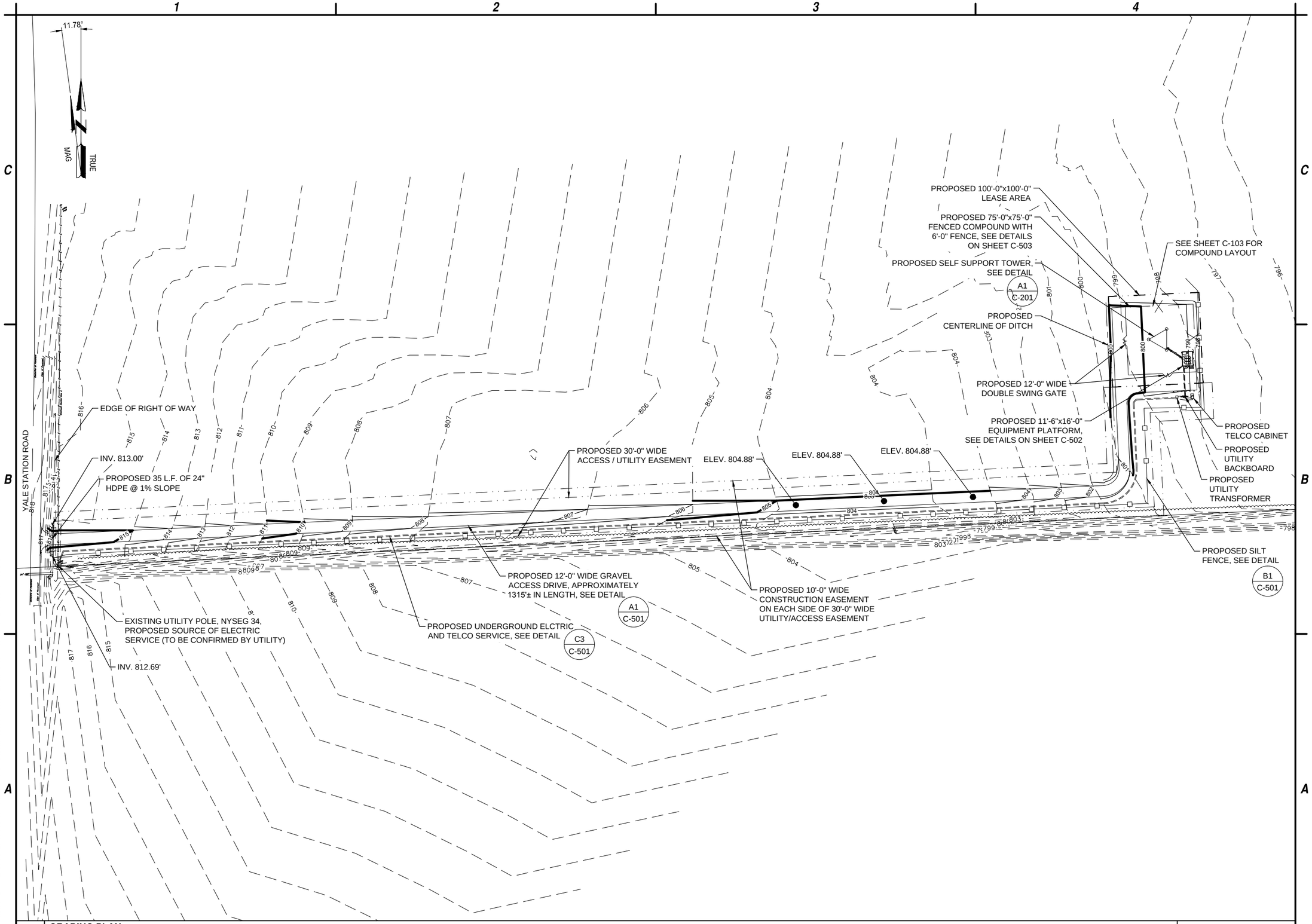

A1 **GRADING PLAN**

SCALE: 1" = 100'-0" (11x17) SCALE: 1" = 50'-0" (22x34)

Feb 02, 2016 – 10:00am
F:\Project\F42 – VERIZON\F42.001.008 UNY NSB Macro 2015\Design\Codd\Dresden\Zoning\Sheet Files\Civil\F42001008_C-102.dwg

C&S COMPANIES

C&S Engineers, Inc.
499 Col. Eileen Collins Blvd.
Syracuse, New York 13212
Phone: 315-455-2000
Fax: 315-455-9667
www.cscos.com

STATE OF NEW YORK · ERIC K. KENNA · LICENSED PROFESSIONAL ENGINEER · 098339

verizon

VERIZON WIRELESS
SITE NAME: DRESDEN
PROJECT NO.: 20131002739
LOCATION CODE: 283935
2382 HAZARD ROAD
PENN YAN, NY 14527

MARK	DATE	DESCRIPTION
1	2-2-16	ISSUED FOR PERMITTING

REVISIONS

PROJECT NO:	F42.001.008
DATE:	DECEMBER 2015
DRAWN BY:	M. BUCKINGHAM
DESIGNED BY:	E.N. KENNA, PE
CHECKED BY:	E.N. KENNA, PE

NO ALTERATION PERMITTED HEREON EXCEPT AS PROVIDED UNDER SECTION 7209 SUBDIVISION 2 OF THE NEW YORK EDUCATION LAW

GRADING PLAN

C-102

Copyright ©

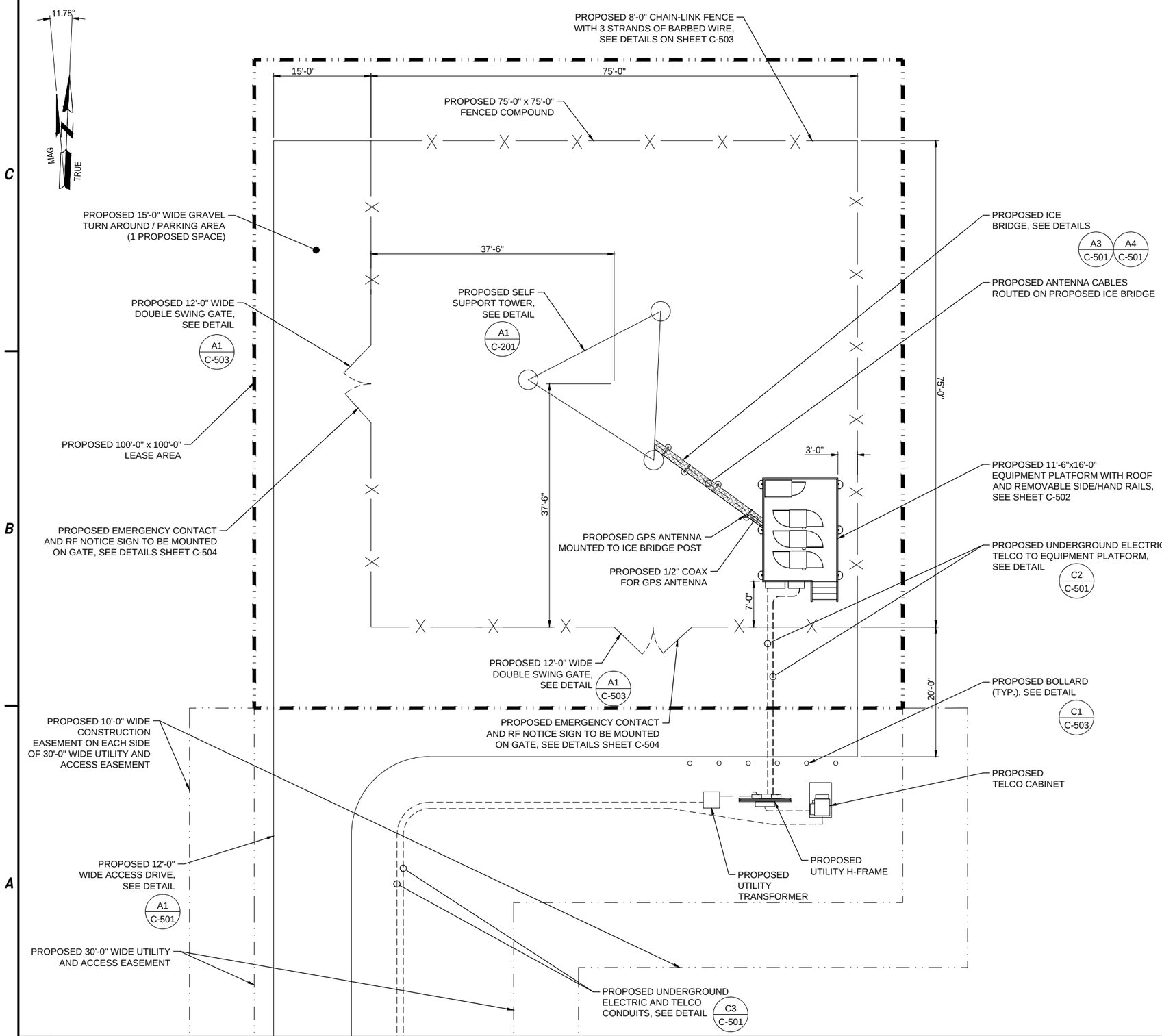

A1 **COMPOUND PLAN**

SCALE: 1" = 16'-0" (11x17) SCALE: 1" = 8'-0" (22x34)

0 4' 8' 16'

GENERAL NOTES:

1. THE PROJECT CONCERNS THE INSTALLATION, OPERATION, AND MAINTENANCE OF AN UNMANNED PUBLIC UTILITY/PERSONAL WIRELESS SERVICE FACILITY.
2. THE PROPOSED DEVELOPMENT IS UNMANNED AND DOES NOT REQUIRE A MEANS OF WATER SUPPLY OR SEWAGE DISPOSAL, OR HANDICAPPED ACCESS.
3. THE PROPOSED DEVELOPMENT IS MINIMAL, AND WILL CREATE NEGLIGIBLE ADDITIONAL STORMWATER RUNOFF AND WILL THEREFORE NOT IMPACT THE EXISTING STORMWATER DRAINAGE SYSTEM.
4. THE PROPOSED DEVELOPMENT DOES NOT INCLUDE OUTDOOR STORAGE, ANY SOLID WASTE RECEPTACLES, OR PLUMBING.
5. ADEQUATE PARKING EXIST FOR ONE VEHICLE FOR MAINTENANCE ONCE A MONTH OR EMERGENCY SERVICE.
6. THERE ARE NO NEW STREETS, CURBS, SIDEWALKS OR WALKWAYS PROPOSED.
7. THERE ARE NO COMMERCIAL SIGNS PROPOSED FOR THIS INSTALLATION.
8. EXISTING UTILITIES (LOCATION, SIZES AND INVERTS) SHOWN ON THE PLANS ARE APPROXIMATE AND ARE NOT CERTIFIED AS TO THE ACCURACY OF THEIR LOCATION OR COMPLETENESS. THE CONTRACTOR SHALL BE RESPONSIBLE FOR DETERMINING THE EXACT LOCATIONS AND DEPTHS OF ALL UTILITIES AND STRUCTURES IN THE PATH OF, OR CLOSELY PARALLEL TO, OR UNDER THE PROPOSED CONSTRUCTION. THE CONTRACTOR SHALL BE RESPONSIBLE FOR ANY DELAYS OR DAMAGES OCCURRING AS A RESULT OF INCORRECTLY LOCATED UTILITIES. IT IS THE CONTRACTORS RESPONSIBILITY TO NOTIFY THE VARIOUS UTILITY OWNERS IN AMPLE TIME FOR THEM TO LOCATE AND MARK THEIR FACILITIES. THE CONTRACTOR SHALL ALSO NOTIFY UNDERGROUND UTILITY LOCATION SERVICE AT LEAST 48 HOURS IN ADVANCE OF COMMENCING ANY WORK.

SITE NOTES:

1. ALL SITE WORK SHALL BE AS INDICATED ON THE DRAWING.
2. RUBBISH, STUMPS, DEBRIS, STICKS, STONES AND OTHER REFUSE SHALL BE REMOVED FROM THE SITE AND DISPOSED OF LEGALLY.
3. THE SITE SHALL BE GRADED TO CAUSE SURFACE WATER TO FLOW AWAY FROM THE EQUIPMENT AND TOWER AREAS.
4. NO FILL OR EMBANKMENT MATERIAL SHALL BE PLACED ON FROZEN GROUND. FROZEN MATERIALS, SNOW OR ICE SHALL NOT BE PLACED IN ANY FILL OR EMBANKMENT.
5. THE SUBGRADE SHALL BE COMPACTED AND BROUGHT TO A SMOOTH UNIFORM GRADE PRIOR TO FINISHED SURFACE APPLICATION.
6. ALL EXISTING ACTIVE SEWER, WATER, GAS, ELECTRIC, AND OTHER UTILITIES WHERE ENCOUNTERED IN THE WORK, SHALL BE PROTECTED AT ALL TIMES, AND WHERE REQUIRED FOR THE PROPER EXECUTION OF THE WORK, SHALL BE RELOCATED AS DIRECTED BY ENGINEERS. EXTREME CAUTION SHOULD BE USED BY THE CONTRACTOR WHEN EXCAVATING OR PIER DRILLING AROUND OR NEAR UTILITIES.
7. ALL EXISTING INACTIVE SEWER, WATER, GAS, ELECTRIC AND OTHER UTILITIES, WHICH INTERFERE WITH THE EXECUTION OF THE WORK SHALL BE REMOVED AND/OR CAPPED, PLUGGED OR OTHERWISE DISCONTINUED AT POINTS WHICH WILL NOT INTERFERE WITH THE EXECUTION OF THE WORK, SUBJECT TO THE APPROVAL OF ENGINEERING.
8. THE AREAS DISTURBED DUE TO CONSTRUCTION ACTIVITY SHALL BE GRADED TO UNIFORM SLOPE, FERTILIZED, SEEDED, AND COVERED WITH MULCH.
9. CONTRACTOR SHALL MINIMIZE DISTURBANCE TO EXISTING SITE DURING CONSTRUCTION. EROSION CONTROL MEASURES, IF REQUIRED DURING CONSTRUCTION, SHALL BE IN CONFORMANCE WITH THE NEW YORK STATE GUIDELINES FOR EROSION AND SEDIMENT CONTROL, AND COORDINATED WITH THE TOWN.
10. CONTRACTOR SHALL NOTIFY UNDERGROUND FACILITIES PROTECTIVE ORGANIZATION AT TELEPHONE NUMBER 1-800-962-7962 PRIOR TO EXCAVATION AT SITE.
11. ALL EXCAVATION WORK WITHIN 36" OF EITHER SIDE OF UNDERGROUND UTILITIES MUST BE DONE BY HAND EXCAVATION METHODS.

C&S COMPANIES

C&S Engineers, Inc.
499 Col. Eileen Collins Blvd.
Syracuse, New York 13212
Phone: 315-455-2000
Fax: 315-455-9667
www.cscos.com

STATE OF NEW YORK · ERIC KENNA · 098339 · LICENSED PROFESSIONAL ENGINEER

verizon

VERIZON WIRELESS
SITE NAME: DRESDEN
PROJECT NO.: 201310027 39
LOCATION CODE: 283935
2382 HAZARD ROAD
PENN YAN, NY 14527

MARK	DATE	DESCRIPTION
1	2-2-16	ISSUED FOR PERMITTING

REVISIONS

PROJECT NO:	F42.001.008
DATE:	DECEMBER 2015
DRAWN BY:	M. BUCKINGHAM
DESIGNED BY:	-
CHECKED BY:	E.N. KENNA, P.E.

NO ALTERATION PERMITTED HEREON EXCEPT AS PROVIDED UNDER SECTION 7209 SUBDIVISION 2 OF THE NEW YORK EDUCATION LAW

COMPOUND PLAN

C-103

Copyright ©

Feb 02, 2016 – 10:00am
F:\Project\F42 – VERIZON\F42.001.008 UNY NSB Macro 2015\Design\Cadd\Dresden\Zoning\Sheet Files\Civil\F42001008_C-103.dwg

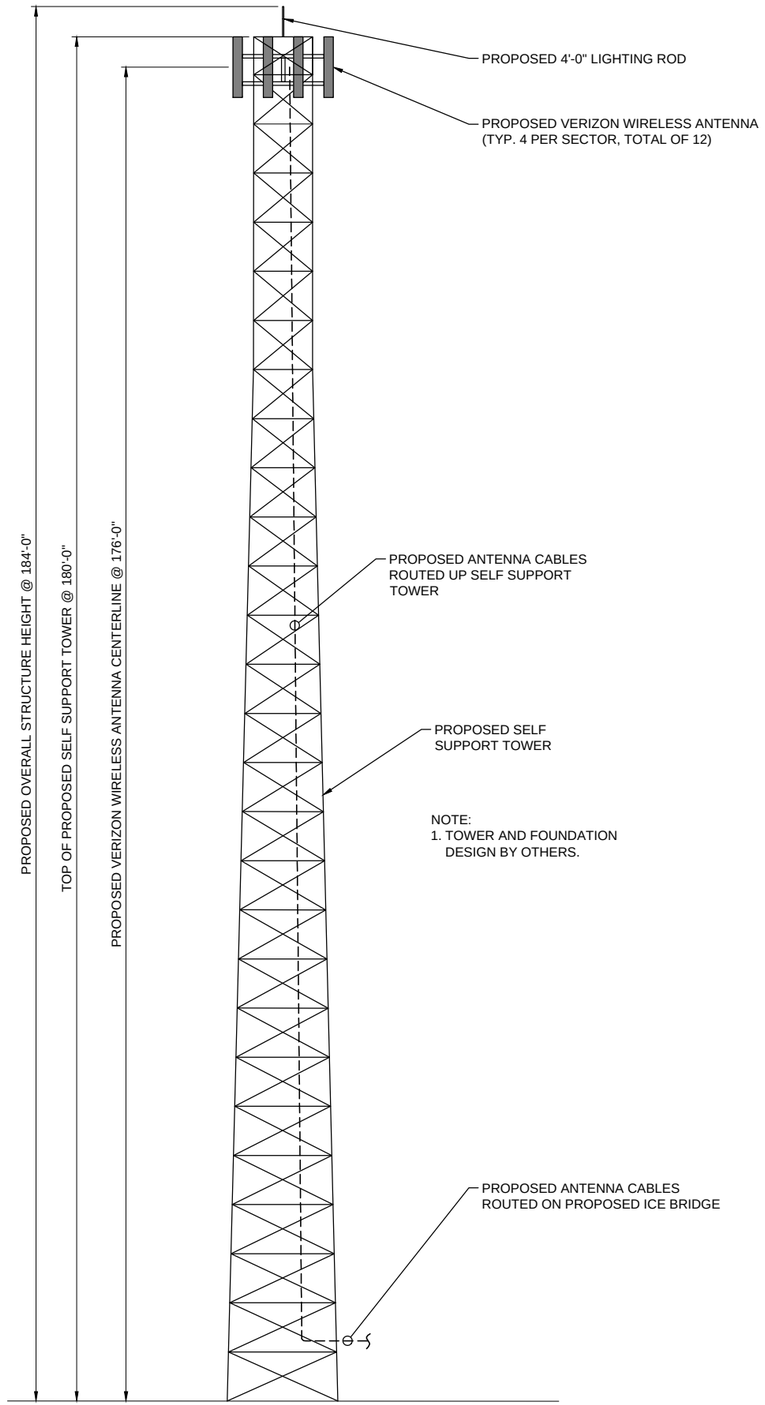

NOTE:
1. TOWER AND FOUNDATION DESIGN BY OTHERS.

A1 TOWER ELEVATION

SCALE: 1" = 20'-0" (11x17) SCALE: 1" = 10'-0" (22x34)

0 10' 20'

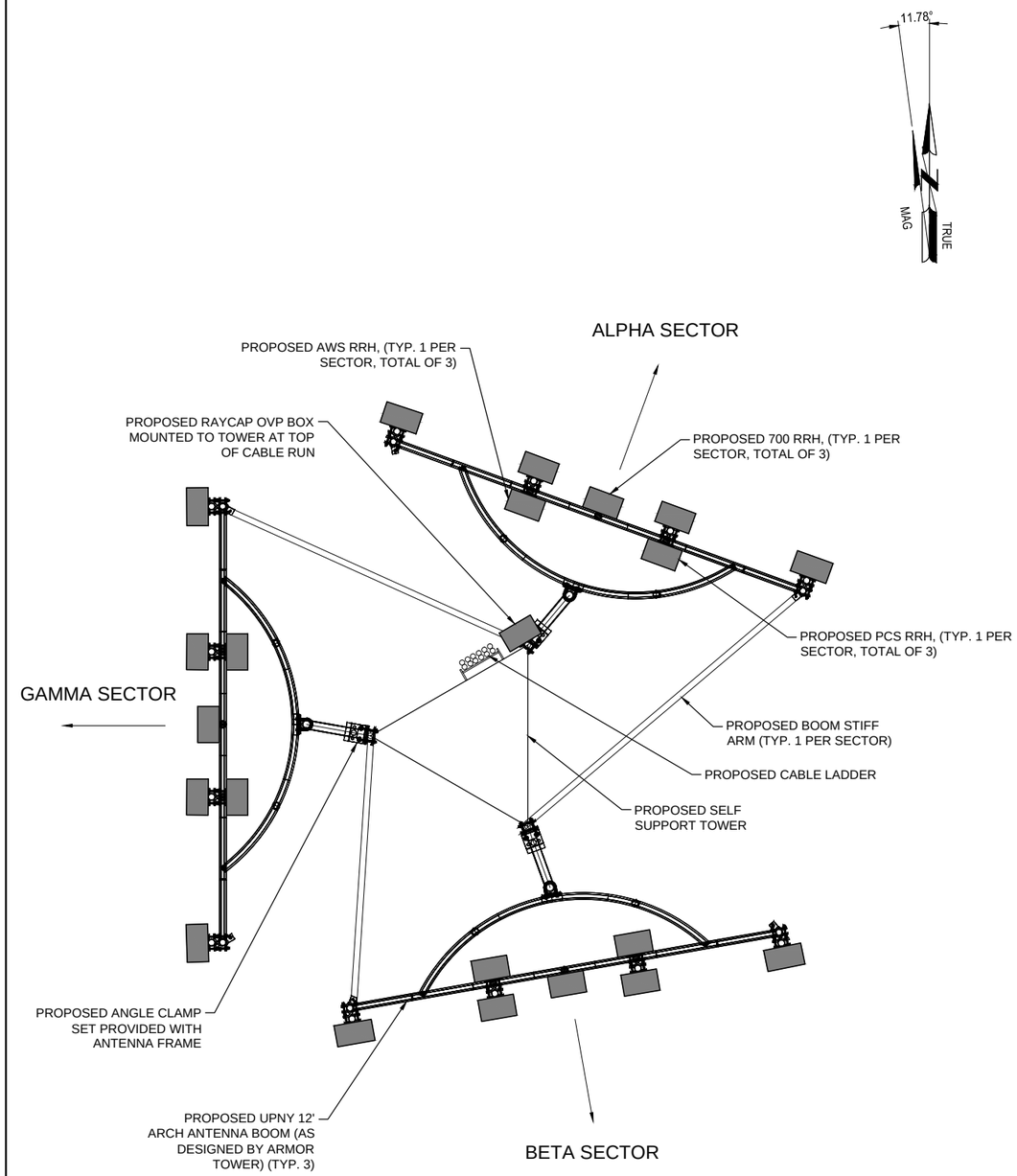

NOTE:
C&S DID NOT ANALYZE THE ANTENNA MOUNTS FOR THE PROPOSED LOADING. THE ILLUSTRATION OF THE PROPOSED ANTENNAS ON THIS TOWER SHALL NOT BE CONSTRUED AS CERTIFICATION BY THE UNDERSIGNED ENGINEER THAT SUCH ANALYSIS HAS BEEN COMPLETED.

A2 PROPOSED ANTENNA PLAN

NTS

C&S COMPANIES
C&S Engineers, Inc.
499 Col. Eileen Collins Blvd.
Syracuse, New York 13212
Phone: 315-455-2000
Fax: 315-455-9667
www.cscos.com

STATE OF NEW YORK · ERIC T. KENNA · LICENSED PROFESSIONAL ENGINEER · 098339

verizon

VERIZON WIRELESS
SITE NAME: DRESDEN
PROJECT NO.: 201310027 39
LOCATION CODE: 283935
2382 HAZARD ROAD
PENN YAN, NY 14527

MARK	DATE	DESCRIPTION
1	2-2-16	ISSUED FOR PERMITTING

REVISIONS

PROJECT NO:	F42.001.008
DATE:	DECEMBER 2015
DRAWN BY:	M. BUCKINGHAM
DESIGNED BY:	E.N. KENNA, PE
CHECKED BY:	E.N. KENNA, PE

NO ALTERATION PERMITTED HEREON EXCEPT AS PROVIDED UNDER SECTION 7209 SUBDIVISION 2 OF THE NEW YORK EDUCATION LAW

TOWER ELEVATION

C-201

Copyright ©

Feb 02, 2016 – 10:01am
F:\Project\F42 – VERIZON\F42.001.008 UNY NSB Macro 2015\Design\Cadd\Dresden\Zoning\Sheet Files\Civil\F42001008_C-201.dwg

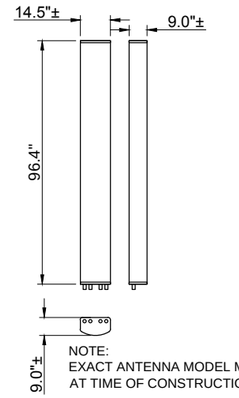

NOTE:
EXACT ANTENNA MODEL MAY VARY AT TIME OF CONSTRUCTION.

C1 TYPICAL ANTENNA DETAIL
NOT TO SCALE

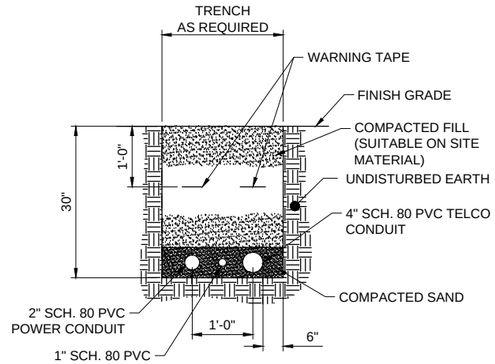

NOTES:
1. NUMBER AND SIZE OF CONDUITS MAY VARY, SEE ONE-LINE DIAGRAM.
2. PROVIDE SCH 80 BENEATH ACCESS DRIVE/PARKING AREA.

C2 ELECTRIC / TELCO TRENCH DETAIL
NOT TO SCALE

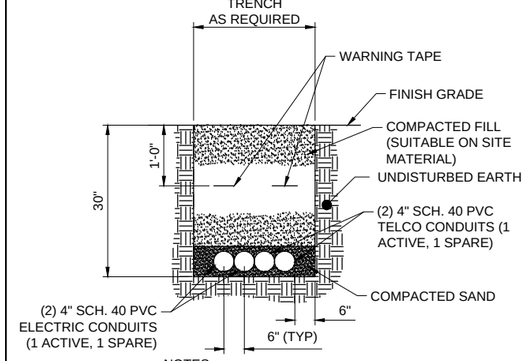

NOTES:
1. NUMBER AND SIZE OF CONDUITS MAY VARY, SEE ONE-LINE DIAGRAM.
2. PROVIDE SCH 80 BENEATH ACCESS DRIVE/PARKING AREA.

C3 CABLE / TELCO TRENCH DETAIL
NOT TO SCALE

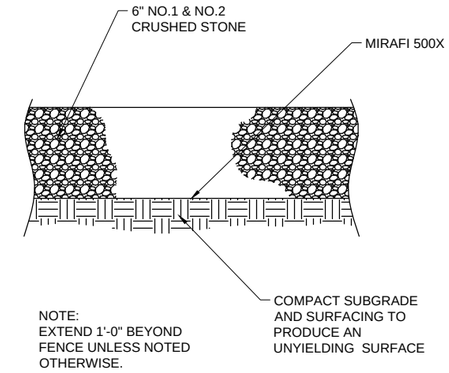

NOTE:
EXTEND 1'-0" BEYOND FENCE UNLESS NOTED OTHERWISE.

C4 STONE YARD DETAIL
NOT TO SCALE

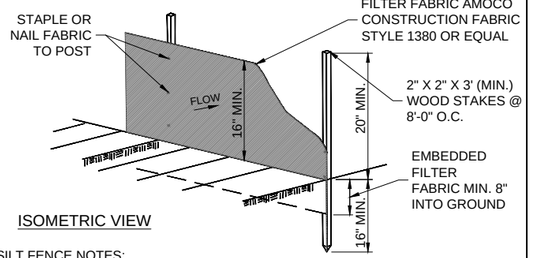

SILT FENCE NOTES:

1. WOVEN WIRE FENCE SHALL BE SECURELY FASTENED TO FENCE POSTS WITH WIRE TIES OR STAPLES.
2. SILT FENCE FABRIC SHALL BE SECURELY FASTENED TO WOVEN WIRE FENCE WITH TIES SPACED EVERY 24" AT TOP AND MID-SECTION, WHEN TWO SECTIONS OF SILT FENCE FABRIC ADJOIN EACH OTHER THEY SHALL BE OVERLAPPED BY 6" AND FOLDED.
3. MAINTENANCE SHALL BE PROVIDED BY THE CONTRACTOR AS DIRECTED BY ENGINEER AND MATERIAL REMOVED WHEN "BULGES" DEVELOP IN THE SILT FENCE.
4. CONTRACTOR SHALL REMOVE THE SILT FENCE AT THE APPROPRIATE TIME, DRESS THE DISTURBED AREAS, AND DISPOSE OF THE SILT FENCE.

B1 SILT FENCE DETAIL
NOT TO SCALE

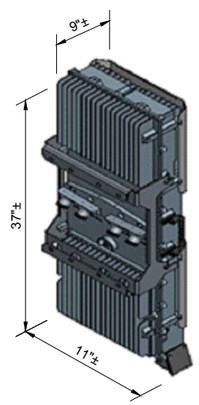

NOTE:
EXACT RRH MODEL MAY VARY AT TIME OF CONSTRUCTION.

B2 TYPICAL RRH DETAIL
NOT TO SCALE

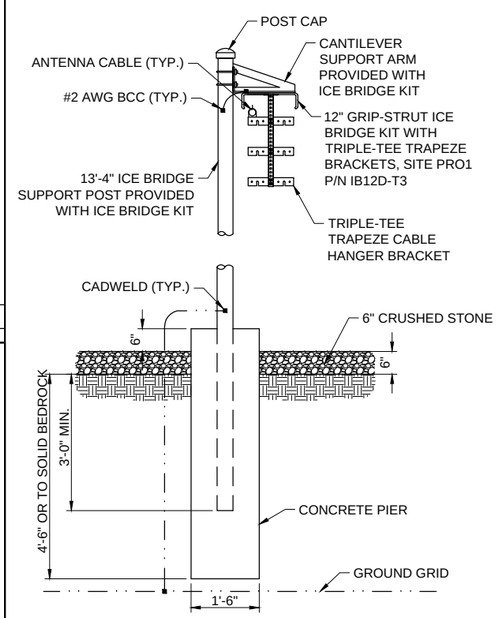

NOTES:
1. USE SITE PRO 1 PARTS OR APPROVED EQUAL.
2. SUPPORT POSTS SHALL BE STAGGERED ON BOTH SIDES OF ICE BRIDGE SPACED NO MORE THAN 6'-0" BETWEEN POSTS.
3. ANY SPLICES OR CANTILEVERED SECTIONS OF THE ICE BRIDGE SHALL BE LOCATED WITHIN 2'-0" OF A SUPPORT POST.

A3 ICE BRIDGE PIER DETAIL
NOT TO SCALE

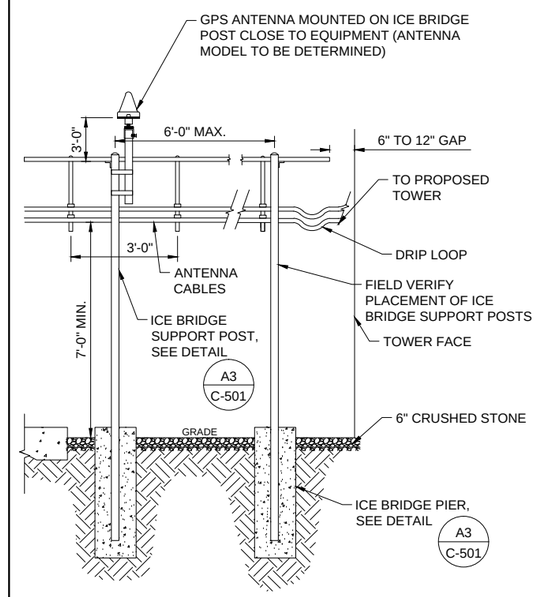

A4 ICE SHIELD - ICE BRIDGE ELEVATION
NOT TO SCALE

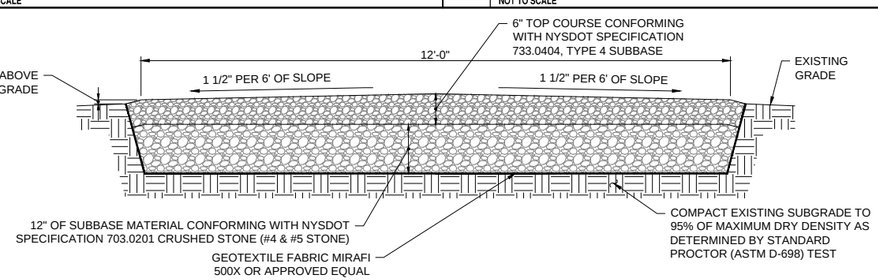

EARTH WORK SUBGRADE COMPACTION & SELECT GRANULAR FILL

1. CONTRACTOR SHALL BE RESPONSIBLE FOR CLEARING & GRUBBING THE CONSTRUCTION SITE AND ROADWAY AREAS. THE CONTRACTOR SHALL COMPLY WITH THE RECOMMENDATIONS CONTAINED WITHIN THE GEOTECHNICAL REPORT, AS PREPARED FOR THIS SITE, WHEN NECESSARY, FOR SITE WORK PREPARATION, & FOUNDATION WORK. AS A MINIMUM THE TOP 3" OF GRADE SHALL BE REMOVED, THE EXPOSED SUBGRADE COMPACTED AND GEOTEXTILE FABRIC INSTALLED AS REQUIRED FOR UNSTABLE SOIL CONDITION.
2. ALL SELECT GRANULAR FILL SHALL BE COMPACTED TO A 95% COMPACTION AT A MAXIMUM DRY DENSITY AS DETERMINED BY MODIFIED PROCTOR TEST (ASTM D-1557) AND WITHIN PLUS OR MINUS 3% OF OPTIMUM MOISTURE CONTENT.
3. CONTRACTOR TO ASSURE THAT EXISTING DRAINAGE PATTERNS ARE MAINTAINED.

A1 GRAVEL DRIVE DETAIL
NOT TO SCALE

C&S COMPANIES
C&S Engineers, Inc.
499 Col. Eileen Collins Blvd.
Syracuse, New York 13212
Phone: 315-455-2000
Fax: 315-455-9667
www.cscos.com

STATE OF NEW YORK · ERIC K. KENNA · LICENSED PROFESSIONAL ENGINEER · 098339

verizon

VERIZON WIRELESS
SITE NAME: DRESDEN
PROJECT NO.: 20131002739
LOCATION CODE: 283935
2382 HAZARD ROAD
PENN YAN, NY 14527

MARK	DATE	DESCRIPTION
1	2-2-16	ISSUED FOR PERMITTING

REVISIONS

PROJECT NO:	F42.001.008
DATE:	DECEMBER 2015
DRAWN BY:	M. BUCKINGHAM
DESIGNED BY:	E.N. KENNA, PE
CHECKED BY:	E.N. KENNA, PE

NO ALTERATION PERMITTED HEREON EXCEPT AS PROVIDED UNDER SECTION 7209 SUBDIVISION 2 OF THE NEW YORK EDUCATION LAW

DETAILS

C-501

Copyright ©

Feb 02, 2016 – 10:01am
F:\Project\F42 – VERIZON\F42.001.008 UNY NSB Macro 2015\Design\Cadd\Dresden\Zoning\Sheet Files\Civil\F42001008_C-501.dwg

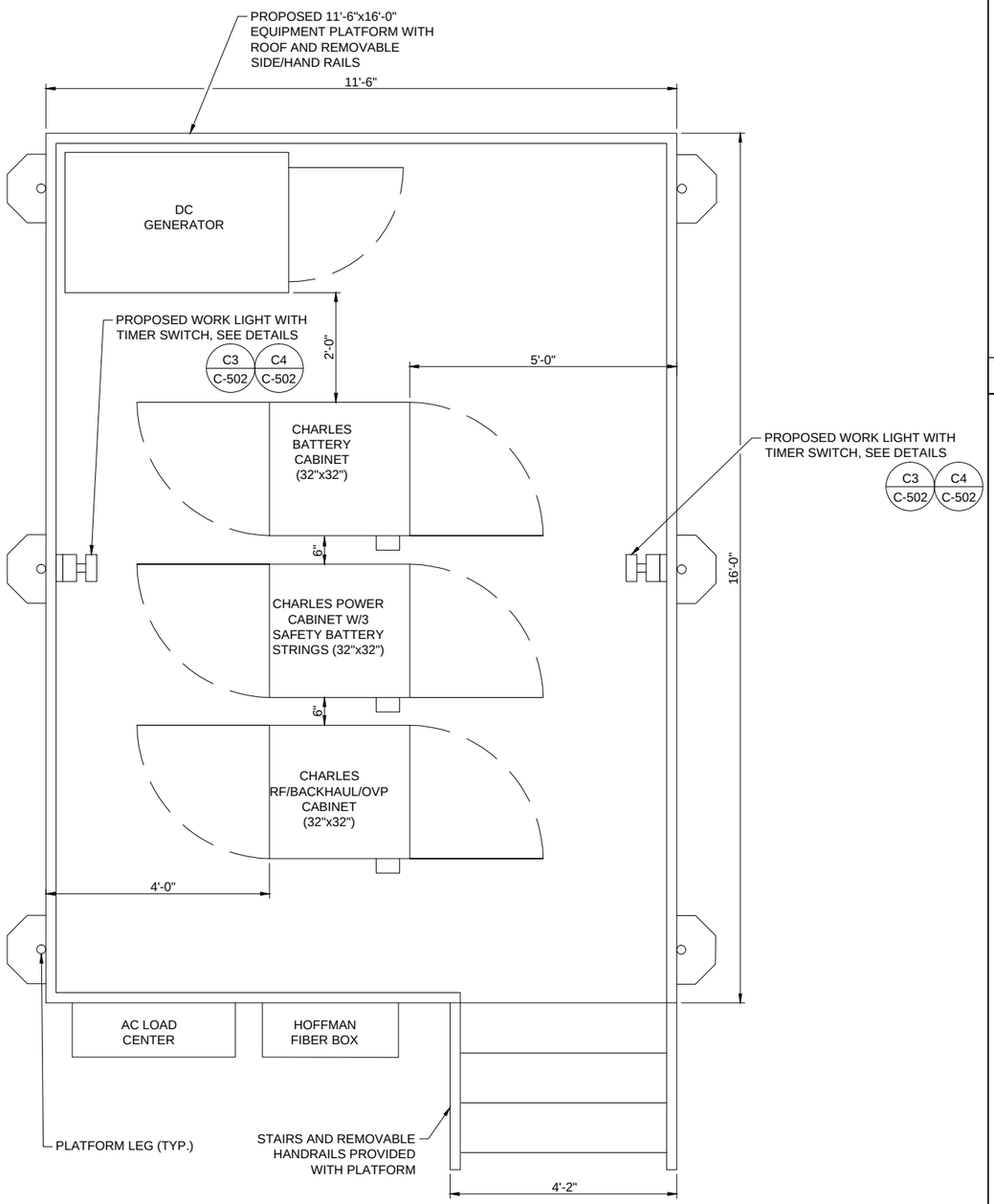

A1 EQUIPMENT PLATFORM LAYOUT PLAN
NOT TO SCALE

MODEL: OLFL 14 PE BZ M4 LED
MANUFACTURER: LITHONIA

C3 WORK LIGHT DETAIL
NOT TO SCALE

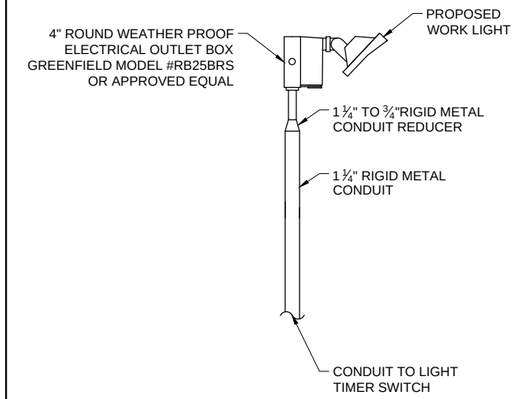

C4 WORK LIGHT MOUNTING DETAIL
NOT TO SCALE

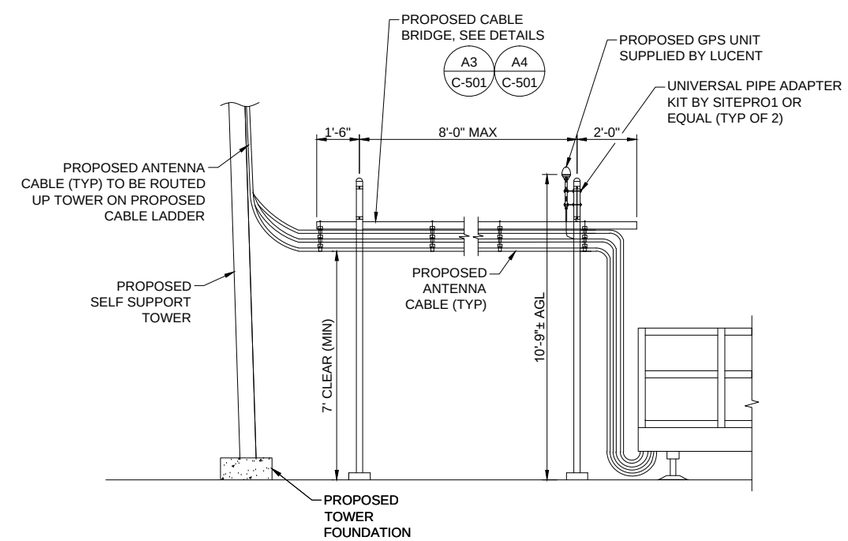

A3 EQUIPMENT ELEVATION
NOT TO SCALE

C&S COMPANIES
C&S Engineers, Inc.
499 Col. Eileen Collins Blvd.
Syracuse, New York 13212
Phone: 315-455-2000
Fax: 315-455-9667
www.cscos.com

STATE OF NEW YORK · ERIC K. KENNA · LICENSED PROFESSIONAL ENGINEER · 083339

verizon

VERIZON WIRELESS
SITE NAME: DRESDEN
PROJECT NO.: 20131002739
LOCATION CODE: 283935
2382 HAZARD ROAD
PENN YAN, NY 14527

MARK	DATE	DESCRIPTION
1	2-2-16	ISSUED FOR PERMITTING

REVISIONS

PROJECT NO:	F42.001.008
DATE:	DECEMBER 2015
DRAWN BY:	J. OSWALD
DESIGNED BY:	
CHECKED BY:	E.N. KENNA, P.E.

NO ALTERATION PERMITTED HEREON EXCEPT AS PROVIDED UNDER SECTION 7209 SUBDIVISION 2 OF THE NEW YORK EDUCATION LAW

EQUIPMENT PLATFORM LAYOUT PLAN & DETAILS

C-502

Copyright ©

Feb 02, 2016 – 10:02am
F:\Project\F42 – VERIZON\F42.001.008 UNY NSB Macro 2015\Design\Cadd\Dresden\Zoning\Sheet Files\Civil\F42001008_C-502.dwg

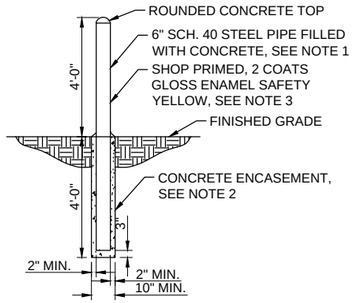

NOTES:

1. PIPE SHALL BE SCHEDULE 40 BLACK STEEL PIPE CONFORMING TO ASTM A120.
2. CONTRACTOR SHALL HAVE A MINIMUM 28 DAY COMPRESSIVE STRENGTH OF 2,000 PSI AND SHALL CONFORM TO CLASS A CONCRETE AS SPECIFIED IN SECTION 501 OF THE NYSDOT STANDARD SPECIFICATIONS.
3. PRIMER SHALL BE A ZINC YELLOW-IRON OXIDE-BASE PAINT CONFORMING TO FEDERAL SPECIFICATION TT-P-57, TYPE II. TOPCOATS SHALL BE A HIGH GLOSS ALKYD ENAMEL PAINT CONFORMING TO FEDERAL SPECIFICATION TT-E-489.

C1 BOLLARD DETAIL
NOT TO SCALE

C2 NOT USED
NOT TO SCALE

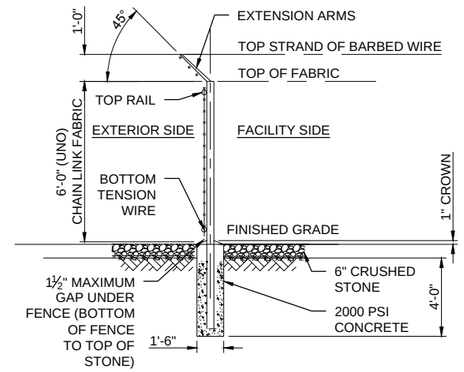

C3 WOVEN WIRE FENCE DETAIL
NOT TO SCALE

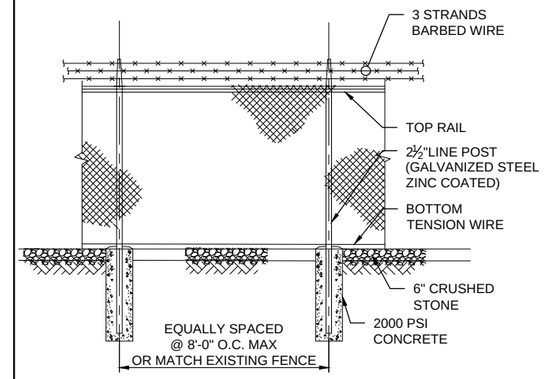

C4 WOVEN WIRE FENCE DETAIL
NOT TO SCALE

B1 NOT USED
NOT TO SCALE

B2 NOT USED
NOT TO SCALE

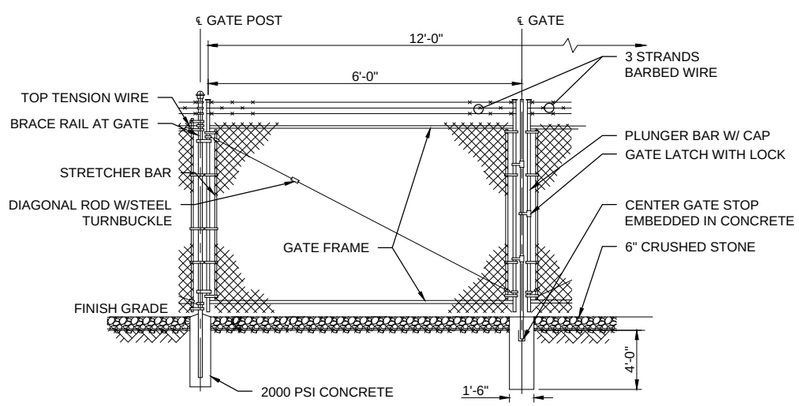

A1 WOVEN WIRE DOUBLE SWING GATE DETAIL
NOT TO SCALE

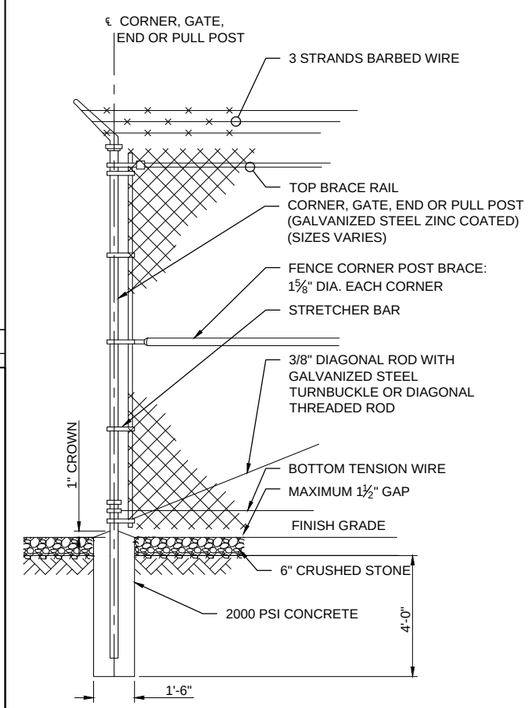

A3 WOVEN WIRE CORNER, GATE, END OR PULL POST DETAIL
NOT TO SCALE

(INSTALL FENCING PER ASTM F-567, SWING GATES PER ASTM F- 900)

1. GATE POST: 4" DIA. SCHEDULE 40 PER ASTM-F 1083, GALVANIZED STEEL ZINC COATED.
2. CORNER AND TERMINAL OR PULL POST: 3" DIA. SCHEDULE 40 PER ASTM-F 1083, GALVANIZED STEEL ZINC COATED.
3. LINE POST: 2½" DIA. SCHEDULE 40 PIPE PER ASTM-F 1083, GALVANIZED STEEL ZINC COATED.
4. GATE FRAME: 1½" DIA. SCHEDULE 40 PIPE PER ASTM-F 1083, GALVANIZED STEEL ZINC COATED.
5. TOP RAIL AND BRACE RAIL: 1½" DIA. SCHEDULE 40 PIPE PER ASTM-F 1083, GALVANIZED STEEL ZINC COATED.
6. FABRIC: 9 GA. CORE WIRE SIZE 2" MESH, CONFORMING TO ASTM-A392.
7. TIE WIRE: MINIMUM 9 GA. GALVANIZED STEEL AT POSTS AND RAILS A SINGLE WRAP OF FABRIC TIE AND AT TENSION WIRE BY HOG RINGS SPACED MAXIMUM 24" INTERVALS.
8. TENSION WIRE: 6 GA. MIN. GALVANIZED STEEL, SHOULD BE CONTINUOUS.
9. BARBED WIRE DOUBLE STRAND 12-½" O.D. TWISTED WIRE TO MATCH EXISTING WITH FABRIC 14 GA., 4 PT. BARBS SPACED ON APPROXIMATELY 5" CENTERS.
10. GATE LATCH: 1-⅜" O.D. PLUNGER ROD WITH MUSHROOM TYPE CATCH AND LOCK, KEYED ALIKE FOR ALL SITES.
11. LOCAL ORDINANCE OF BARBED WIRE PERMIT REQUIREMENT SHALL BE COMPLIED IF REQUIRED.
12. HEIGHT = 6' VERTICAL (UNLESS NOTED OTHERWISE) OR MATCH EXISTING FENCE (IF APPLICABLE) AND 1' BARBED WIRE VERTICAL DIMENSION.
13. MAXIMUM 1½" GAP UNDER FENCE.
14. ALL OPEN POSTS REQUIRE CAPS.

A4 TYPICAL WOVEN WIRE FENCING NOTES
NOT TO SCALE

C&S COMPANIES
C&S Engineers, Inc.
499 Col. Eileen Collins Blvd.
Syracuse, New York 13212
Phone: 315-455-2000
Fax: 315-455-9667
www.cscos.com

STATE OF NEW YORK · KENNETH E. KENNA · LICENSED PROFESSIONAL ENGINEER · 088339

verizon

VERIZON WIRELESS
SITE NAME: DRESDEN
PROJECT NO.: 20131002739
LOCATION CODE: 283935
2382 HAZARD ROAD
PENN YAN, NY 14527

MARK	DATE	DESCRIPTION
1	2-2-16	ISSUED FOR PERMITTING

REVISIONS

PROJECT NO:	F42.001.008
DATE:	DECEMBER 2015
DRAWN BY:	M. BUCKINGHAM
DESIGNED BY:	-
CHECKED BY:	E.N. KENNA, P.E.

NO ALTERATION PERMITTED HEREON EXCEPT AS PROVIDED UNDER SECTION 7209 SUBDIVISION 2 OF THE NEW YORK EDUCATION LAW

DETAILS

C-503

Copyright ©

Feb 02, 2016 – 10:02am
F:\Project\F42 – VERIZON\F42.001.008 UNY NSB Macro 2015\Design\Cadd\Dresden\Zoning\Sheet Files\Civil\F42001008_C-503.dwg

IN CASE OF
EMERGENCY CALL
800-852-2671
IVR UPON ENTRY
SITE NO. _____
STATE _____
SWITCH _____

40 POINT HELVETICA (3/8")
BLACK LETTERING
WHITE BACKGROUND

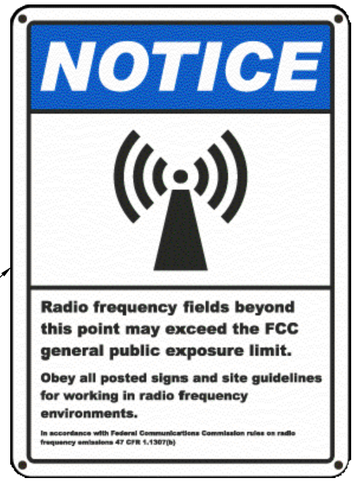

7"x10" OUTDOOR
DURABLE PLASTIC

A1 SIGNAGE DETAILS
NOT TO SCALE

C&S COMPANIES
C&S Engineers, Inc.
499 Col. Eileen Collins Blvd.
Syracuse, New York 13212
Phone: 315-455-2000
Fax: 315-455-9667
www.cscos.com

STATE OF NEW YORK · ERIC N. KENNA · 098339 · LICENSED PROFESSIONAL ENGINEER

verizon

VERIZON WIRELESS
SITE NAME: DRESDEN
PROJECT NO.: 20131002739
LOCATION CODE: 283935
2382 HAZARD ROAD
PENN YAN, NY 14527

MARK	DATE	DESCRIPTION
1	2-2-16	ISSUED FOR PERMITTING

REVISIONS

PROJECT NO: F42.001.008
DATE: DECEMBER 2015
DRAWN BY: M. BUCKINGHAM
DESIGNED BY: -
CHECKED BY: E.N. KENNA, P.E.

NO ALTERATION PERMITTED HEREON EXCEPT AS PROVIDED UNDER SECTION 7209 SUBDIVISION 2 OF THE NEW YORK EDUCATION LAW

SIGNAGE DETAILS

C-504

Copyright ©

Feb 02, 2016 – 10:03am
F:\Project\F42 – VERIZON\F42.001.008 UNY NSB Macro 2015\Design\Cadd\Dresden\Zoning\Sheet Files\Civil\F42001008_C-504.dwg